CHAMPION
GLOBAL POWER EQUIPMENT

Operator's Manual

Home Standby Generator

8.5 kW

MODEL NUMBER **100199**

C ETL US LISTED
Intertek

DANGER: Not intended for use in critical life support application.

DANGER: Generator must be installed and operated outdoors only.

REV 100199-20180912

www.championpowerequipment.com

WARNING

Cancer and Reproductive Harm – www.P65Warnings.ca.gov

DISCLAIMERS

All information, illustrations and specifications in this manual are based on the latest information available at the time of publishing. The illustrations used in this manual are intended as representative reference views only. Products are under a continuous improvement policy. Thus, information, illustrations and/or specifications to explain and/or exemplify a product, service or maintenance improvement may be changed at any time without notice.

ALL RIGHTS RESERVED

No part of this publication may be reproduced or used in any form by any means – graphic, electronic or mechanical, including photocopying, recording, taping or information storage and retrieval systems – without the written permission of Champion Power Equipment (CPE).

Have questions or need assistance?

Do not return this product to the store!

WE ARE HERE TO HELP!

Visit our website:
www.championpowerequipment.com
for more info:

- Product Info & Updates
- Frequently Asked Questions
- Tech Bulletins
- Product Registration

– or –

Call our Customer Care Team Toll-Free at:
1-877-338-0999

This manual must be used with Champion Power Equipment (CPE) manuals:

- Installation Manual, Part No. 101049
- Transfer Switch Manual, Part No. 101111

It is also recommended to refer to the reference materials list on page 16 of the Installation Manual.

*We are always working to improve our products. Therefore, the enclosed product may differ slightly from the image on the cover.

CONTENTS

INTRODUCTION 5
Home standby generator 5
Parts Included 5
General information, Standards and Codes 6
SAFETY 7
Safety Symbol Definitions 7
Installation Hazards. 8
Before Starting 9
Operating Hazards 9
Accidental Starting 10
Carbon Monoxide Hazards. 10
Electrical Shock Hazards 11
Fire/Explosion Hazards 11
Burn Hazards 12
Entanglement Hazards 12
Battery Hazards 12
Safety Labels 12
Safety Labels on Unit 13
Safety, Serial/Model, Nameplate Label Locations . . . 14
GENERAL INFORMATION 15
Component Identification – 8.5 kW Generator. . . . 15
Component Identification – Engine. 16
Control Panel 16
Main Circuit Breaker. 16
Exercise Switch 16
Set Exercise Time. 17
Hour Meter 17
Engine Control Module 17
Reset Fault Code(s) 17
ATS Control Module 18
Battery Charger 19
Emission Requirements. 19
Specifications. 20
Fuel System 21
Battery Requirements 21
Battery Charging 21
Model and Serial Number 21
OPERATION 22
Enclosure and Access 22
Pre-Start Checklist 22
Turning Off the Generator 22
MAINTENANCE. 23
Scheduled Maintenance Chart. 23
Engine Oil 23
Engine Oil Requirements 23
Checking the Engine Oil Level. 23
Changing the Engine Oil Level. 24
Inspect and Clean Engine Air Cleaner. 25
Spark Plug 25
Battery Maintenance. 26
Corrosion Protection 26
Maintenance After Submersion 26
Storage 26
Return to Service after Storage 27
Engine Parts Diagram. 28
Engine Parts List 29
Enclosure and Assemblies Diagram. 30
Enclosure and Assemblies Parts List 31
Alternator and Exhaust System Diagram 32
Alternator and Exhaust System Parts List. 33
Control Panel Diagram 34
Control Panel Parts List 35

CONTENTS

Wiring Diagram 36

TROUBLESHOOTING. 37

ADDITIONAL INFORMATION. 39

Identify / Select Standby Circuits 39

Surge Protection. 39

Customer Familiarization Summary 40

HSB, ATS Model & Serial Reference
Back-Up Circuits 41

Maintenance and Service Record. 42

INTRODUCTION

Congratulations on your purchase of a Champion Power Equipment (CPE) home standby generator. This generator is designed and engineered in the USA to exacting standards of the North American market. This engine-powered generator meets all Environmental Protection Agency (EPA) Phase 3 requirements and is approved by cETLus as tested to UL2200 and CSA22.2 No. 100 in both the USA and Canada.

With proper use and maintenance, this generator will provide years of satisfying service.

The Champion Staff,

Champion Power Equipment
12039 Smith Ave.
Santa Fe Springs, CA 90670

Toll-free: 1-877-338-0999
Mon-Fri 8:30 AM – 5:00 PM (PST/PDT)
www.championpowerequipment.com

HOME STANDBY GENERATOR

This home standby generator is intended exclusively for outdoor installation. This generator will operate using either liquified petroleum gas (LPG) or natural gas (NG).

This generator is designed to supply typical home load such as:

- Induction motors – sump pumps, refrigerators, air conditioners, furnaces
- Electronic items – televisions, computers
- Household lighting
- Microwaves
- This generator is not intended for use in critical life support applications.

Proper sizing of the generator is required to ensure proper operation of appliances. Some appliances require additional wattage to start and must be considered.

PARTS INCLUDED

Your HSB ships with the following:

- Operators Manual
- Installation Manual
- Oil Drain Pan
- Flexible Fuel Line
- HSB Enclosure Keys
- Battery Cable Connection
- LPG Low-speed and Main Converting Jets
- Jet Change Tool
- Lock Nut M6
- Washer, Ø6
- Flange bolt, M6 x 15

GENERAL INFORMATION, STANDARDS AND CODES

The following information related to General Information and Standards was gathered from the list of publications related to installing the HSB generator. A multitude of other materials related to generators were also used concerning common practice, knowledgeable installation practices, certified electrical experience and work related experiences. This information is not all inclusive and the manufacturer strongly recommends the owner and installer become familiar with all pertinent codes, standards and regulations. Always check for the latest publications date to ensure you are current. Have only a qualified/certified electrician or installation technician who is knowledgeable about applicable codes, standards and regulations install and service the generator.

NFPA NO. 30, FLAMMABLE AND CONBUSTIBLE LIQUID CODE

National Fire Protection Association

470 Atlantic Avenue, Boston, MA. 02210

NFPA NO. 37, STATIONARY COMBUSTION ENGINES AND GAS TURBINES

National Fire Protection Association

470 Atlantic Avenue, Boston, Ma. 02210

NFPA NO. 76A, ESSENTIAL ELECTRICAL SYSTEMS FOR HEALTH CARE FACILITIES

National Fire Protection Association

470 Atlantic Avenue, Boston, Ma. 02210

NFPA NO. 54, NATIONAL FUEL GAS CODE

National Fire Protection Association

470 Atlantic Avenue, Boston, Ma. 02210

NFPA NO. 58, AMERICAN NATIONAL STANDARD FOR STORAGE AND HANDLING OF LIQUID PETROLEUM GAS

National Fire Protection Association

470 Atlantic Avenue, Boston, Ma. 02210

NFPA NO. 70, NFPA HANDBOOK OF ELECTRIC CODE

National Fire Protection Association

470 Atlantic Avenue, Boston, Ma. 02210

ARTICLE X, NATIONAL BUILDING CODE

American Insurance Association

85 John Street, New York, N.Y. 10038

AGRICULTURAL WIRING HANDBOOK

Food and Energy Council

909 University Avenue, Columbia, Mo. 65201

ASAE EP-3634, INSTALLATION AND MAINTENANCE OF FARM STANDBY ELECTRICAL SYSTEMS

American Society of Agricultural Engineers

2950 Niles Road, St. Joseph, Mi. 49085

This is the safety alert symbol. It is used to alert you to potential physical injury hazards. Obey all safety messages that follow this symbol to avoid possible injury or death.

The words DANGER, WARNING, CAUTION and NOTICE are used throughout this manual to highlight important information.

⚠ DANGER

Indicates a hazardous situation that, if not avoided, will result in death or serious injury.

⚠ WARNING

Indicates a hazardous situation that, if not avoided, could result in death or serious injury.

⚠ CAUTION

Indicates a hazardous situation that, if not avoided, could result in minor or moderate injury.

NOTICE

Indicates a situation that can cause damage to the equipment, personal property and/or the environment, or cause the equipment to operate improperly.

NOTE: **Indicates a procedure, practice or condition that should be followed in order for the generator to function in the manner intended.**

SAFETY SYMBOL DEFINITIONS

	Black hazard pictorial on yellow equilateral triangle enclosed by black triangular band Warns that hazard exists and describes its nature and/or consequences
	Black hazard pictorial on white circle enclosed by red circular band with red diagonal bar Depicts action NOT to be taken or action to be stopped in order to avoid hazard
	White hazard pictorial on blue circle Depicts action to be taken in order to avoid hazard

/// WARNINGS

	Safety alert symbol
	Asphyxiation hazard
	Electrical shock hazard
	Entanglement hazard
	Fire hazard

	Explosion hazard
	Burn hazard
	Sever hazard (rotating blade)
	Crush hazard (top)

/// MANDATORY ACTIONS

	Read manufacturer's instructions
	Wear eye protection
	Wear personal protective equipment
	Do not leave tools in the area

INSTALLATION HAZARDS

⚠ WARNING

Have only a qualified electrician or installation technician who is familiar with applicable codes, standards and regulations install and service the generator.

ALWAYS comply with local, state and national electrical and building codes when installing the generator. NEVER alter the recommended installation in a way that would render the unit noncompliant with these codes.

ALWAYS comply with regulations that Occupational Safety and Health Administration (OSHA) has established.

ENSURE the generator is installed following the manufacturer's instructions.

NOTICE

Before welding components on the generator, contact CPE for recommended welding instructions.

⚠ WARNING

Not intended for use in critical life support applications.

BEFORE STARTING

⚠ CAUTION

Before starting, operating and maintaining this generator, be sure to read and understand the content and safety messages in this manual. The operator is responsible for safe operation and maintenance of the generator. Be sure all potential users of the generator also understand these instructions. If any portion of this manual is not understood, contact your dealer for assistance before operating the generator.

The operator is responsible for performing all safety checks, making sure all maintenance is properly performed and making sure the generator is periodically checked by the dealer.

Inspect the generator regularly. Contact your dealer if repairs are needed.

NEVER climb or step on any part or components of the generator. Doing so may result in injury and cause leaking fuel and exhaust.

OPERATING HAZARDS

⚠ WARNING

ALWAYS operate the generator following the manufacturer's instructions. Operating the generator imprudently, neglecting maintenance or being careless can result in injury or possible death.

DO NOT allow children or unqualified persons to operate or service the generator.

NEVER operate the generator with the covers open. Operate the generator only with the covers closed and secured in place. NEVER leave the covers unlocked.

Remain alert at all times when working on the generator. NEVER work on the generator when physically or mentally fatigued.

Never operate the generator while under the influence of alcohol or drugs. Their effects on vision and judgment make operating a generator dangerous.

ACCIDENTAL STARTING

⚠ WARNING

ALWAYS prevent the generator from starting while the covers are open. The generator may crank and start at any time without notice. Follow these steps in order:

1. Turn the exercise switch to the OFF position.
2. Switch the main circuit breaker to the OFF position.
3. Turn the ATS control module to the OFF position.
4. Turn the engine control module switch to the OFF position.
5. Disconnect the NEGATIVE, NEG or (-) battery cable first, and then remove the POSITIVE, POS or (+) battery cable.

To return the generator to service, follow these steps in order:

1. Connect the POSITIVE, POS or (+) battery cable first, and then connect the NEGATIVE, NEG or (-) battery cable.
2. Turn the engine control module switch to the ATS position.
3. Turn the ATS control module switch to the AUTO position.
4. Switch the main circuit breaker to the ON position.
5. Turn the exercise switch to the ON position.

CARBON MONOXIDE HAZARDS

⚠ DANGER

Generator exhaust contains carbon monoxide, a colorless, odorless, poisonous gas. Breathing carbon monoxide will cause nausea, dizziness, fainting or death. If you start to feel dizzy or weak, get to fresh air immediately.

- The generator must be installed and operated outdoors only. NEVER install the generator where exhaust fumes could seep inside or be drawn into a potentially occupied building through windows, air intake vents or other openings.
- Avoid breathing exhaust fumes when near an operating generator.
- NEVER alter or add to the exhaust system or do anything that might render the system unsafe or in noncompliance with applicable codes, standards, laws and regulations.
- Install a battery-operated carbon monoxide detector on each level of any building adjacent to the generator following the manufacturer's instructions.
- NEVER permit even partial blockage of engine cooling ventilation air. Doing so can seriously affect safe operation of the generator.

Carbon monoxide poisoning symptoms include but are not limited to the following:

- Light-headedness, dizziness
- Physical fatigue, weakness in joints and muscles
- Sleepiness, mental fatigue, inability to concentrate or speak clearly, blurred vision
- Stomachache, vomiting, nausea

Carbon monoxide poisoning is possible if someone is experiencing any of these symptoms. Seek fresh air immediately. DO NOT sit, lie down or fall asleep. Alert others to the possibility of carbon monoxide poisoning. If the affected person does not improve within minutes of breathing fresh air, call 911 immediately.

ELECTRICAL SHOCK HAZARDS

⚠ WARNING

Use extreme caution when near the generator while it is operating. The generator produces dangerous voltage.

- Avoid contact with bare wires, terminals and connections while the generator is operating.
- ALWAYS stand on an insulated dry surface to reduce shock hazard if work must be done on an operating generator.
- NEVER wear jewelry that can conduct electricity when working on the generator.
- NEVER handle any kind of electrical device while hands or feet are wet, while standing in water or while barefoot.
- Proper earth grounding of the frame and external electrical conductive components is required by the National Electrical Code (NEC). State and local codes for proper grounding may also apply.
- Avoid direct contact with an electric shock victim. Immediately shut down the source of electrical power. If this is not possible, attempt to free the victim from the live conductor using a nonconducting item such as a dry board or rope. If the victim is unconscious, apply first aid and call 911 immediately.

FIRE/EXPLOSION HAZARDS

⚠ WARNING

NG and LPG are extremely explosive.

- NEVER allow any flames or smoke near the fuel system.
- Wipe up any oil spills immediately.
- NEVER allow any combustible materials to be near the generator or to be left in the generator compartment.
- ALWAYS keep the surrounding area near the generator clean and free of debris.
- Be sure to properly purge the fuel lines and leak-test according to applicable codes before placing the generator in service.
- Be sure to regularly inspect the fuel system for leaks. NEVER operate the generator if a fuel leak is present.
- Install a fire extinguisher near the generator. Keep it properly charged and be familiar with its use. An ABC rated National Fire Protection extinguisher is appropriate for use on standby electric systems. Contact your local fire department with any questions concerning the fire extinguisher.

BURN HAZARDS

⚠ WARNING

ALWAYS allow hot surfaces to cool to the touch. Running engines produce heat. Severe burns can occur on contact.

- DO NOT touch hot surfaces.
- Avoid contact with hot exhaust components and gases.

ENTANGLEMENT HAZARDS

⚠ WARNING

Use extreme caution when near rotating parts. Rotating parts can entangle hands, feet, hair, clothing and/or accessories. Traumatic amputation or severe laceration can result.

- Keep hands and feet away from rotating parts.
- Tie up long hair and remove jewelry.
- Operate equipment with guards in place.
- DO NOT wear loose-fitting clothing, dangling drawstrings or items that could become caught.

BATTERY HAZARDS

⚠ WARNING

Always read and comply with the battery manufacturer's recommendations for procedures concerning proper battery use and maintenance.

⚠ WARNING

Batteries contain sulfuric acid and generate explosive mixtures of hydrogen and oxygen gases. Keep any device that may cause sparks or flames away from the battery to prevent explosion.

Always wear protective glasses or goggles and protective clothing when working with batteries. You must follow the battery manufacturer's instructions on safety, maintenance and installation procedures.

SAFETY LABELS

⚠ WARNING

All safety labels must be legible to alert personnel of safety hazards.

- Replace any illegible or missing label immediately. Missing safety labels must be replaced in their original position before the generator is operated.
- DO NOT operate the generator if there are missing or badly worn safety labels.

/// SAFETY LABELS ON UNIT

①

⚠ WARNING!

Poisonous Gas Hazard Generator exhaust contains carbon monoxide. Breathing carbon monoxide will cause nausea, dizziness, and fainting, and it may cause death.

⚠ AVERTISSEMENT!

Risque d'empoisonnement par le gaz Les gaz d'échappement de groupe électrogène contiennent du monoxyde de carbone. Si l'on respire du monoxyde de carbone, ceci peut provoquer des nausées, un évanouissement et une perte de conscience, et ceci peut provoquer la mort.

⚠ ¡ADVERTENCIA!

Riesgo de gas venenoso El escape del generador contiene monóxido de carbono. Aspirar monóxido de carbono causará náuseas, mareos, desvanecimiento y hasta la muerte.

⚠ CAUTION!

Burn Hazard DO NOT touch hot surfaces. Avoid contact with exhaust components and gases.

⚠ ATTENTION!

Risque de brûlure NE touchez PAS les surfaces chaudes. Evitez le contact avec les composants et les gaz d'échappement.

⚠ PRECAUCIÓN!

Riesgo de quemaduras NO toque las superficies calientes. Evite el contacto con los componentes de escape y gases.

⚠ WARNING!

Fire Hazard ALWAYS keep the surrounding area near generator clean and free of debris and/or dry vegetation. The generator may create sparks while operating.

⚠ AVERTISSEMENT!

Risque d'incendie Nettoyez TOUJOURS la surface à proximité du groupe électrogène et enlevez les débris et/ou la végétation sèche. Le groupe électrogène peut générer des étincelles pendant son fonctionnement.

⚠ ¡ADVERTENCIA!

Riesgo de incendio SIEMPRE mantenga el área circundante cerca del generador limpia y libre de escombros y/o vegetación seca. El generador puede crear chispas mientras está en funcionamiento.

101500

101500

②

⚠ CAUTION!

Burn Hazard DO NOT touch hot surfaces. Allow the engine and alternator to cool to the touch before servicing.

⚠ ATTENTION!

Danger de brulure NE TOUCHEZ PAS les surfaces chaudes. Laissez le moteur et l'alternateur devenir froid au toucher avant d'intervenir.

⚠ PRECAUCIÓN!

Riesgo de quemaduras NO toque las superficies calientes. Deje que el motor y el alternador se enfríen para tocarlos antes de realizarles el mantenimiento.

100794

100794

③

⚠ WARNING!

Electrical Shock Hazard
Do not remove this access panel. The panel should only be removed by an authorized Service Dealer or a qualified electrician; high voltage inside.

⚠ AVERTISSEMENT!

Risque de choc électrique
N'enlevez pas ce panneau d'accès.
Le panneau ne devrait être enlevé que par un concessionnaire d'entretien agréé ou un électricien qualifié ; haute tension à l'intérieur.

⚠ ¡ADVERTENCIA!

Riesgo de descarga eléctrica
No remueva este tablero de acceso. El tablero sólo deberá ser removido por un distribuidor de servicio autorizado o un electricista calificado; alto voltaje al interior.

101045

101045

④

⚠ CAUTION!

Burn Hazard DO NOT touch hot surfaces. Avoid contact with exhaust components and gases.

⚠ ATTENTION!

Risque de brûlure NE touchez PAS les surfaces chaudes. Evitez le contact avec les composants et les gaz d'échappement.

⚠ PRECAUCIÓN!

Riesgo de quemaduras NO toque las superficies calientes. Evite el contacto con los componentes de escape y gases.

101051

101051

⑤

⚠ WARNING!

Electrical Shock Hazard ALWAYS close and lock generator covers before operating. The generator produces dangerous voltage.

⚠ AVERTISSEMENT!

Risque de choc électrique Fermez et verrouillez TOUJOURS les capots de groupe électrogène avant d'utiliser le groupe. Le groupe électrogène génère des tensions dangereuses.

⚠ ¡ADVERTENCIA!

Riesgo de descarga eléctrica
SIEMPRE cierre y trabe las tapas del generador antes de ponerlo en funcionamiento. El generador produce un voltaje peligroso.

100789

100789

⑥

⚠ WARNING!

Explosion Hazard Battery gases are explosive. Keep sparks and flames away from the battery compartment.

⚠ AVERTISSEMENT!

Risque d'explosion Les gaz dégagés par la batterie peuvent exploser. Ecartez les étincelles et les flammes du compartiment batterie.

⚠ ¡ADVERTENCIA!

Riesgo de explosión Los gases de las baterías son explosivos. Mantenga las chispas y llamas alejadas del compartimento de las baterías.

⚠ WARNING!

Read Operator's Manual Read, understand and follow all safety messages in Installation and Operator's manuals.

⚠ AVERTISSEMENT!

Lisez le manuel d'utilisation Lisez, comprenez bien et respectez tous les messages de sécurité dans les manuels d'installation et d'utilisation.

⚠ ¡ADVERTENCIA!

Lea el manual del operador Lea, comprenda y siga todos los mensajes de seguridad en los manuales de instalación y del operador.

⚠ WARNING!

Starting Hazard The generator may crank and start at any time without notice. Prevent the generator from starting while the covers are open. See the safety section of the operator's manual for further detail.

⚠ AVERTISSEMENT!

Risque au démarrage Le groupe électrogène peut tourner et démarrer à tout moment sans préavis. Ne démarrez pas le groupe électrogène lorsque les capots sont ouverts. Consultez la section sécurité du manuel d'utilisation pour plus de détail.

⚠ ¡ADVERTENCIA!

Riesgo de inicio El generador puede encenderse y ponerse en marcha en cualquier momento sin previo aviso. Evite que el generador se ponga en marcha mientras las tapas están abiertas. Vea la sección de seguridad en el manual del operador para más detalles.

101499

101499

/// SAFETY, SERIAL/MODEL, NAMEPLATE LABEL LOCATIONS

The safety labels have specific placement and must be replaced if they are unreadable, damaged or missing.

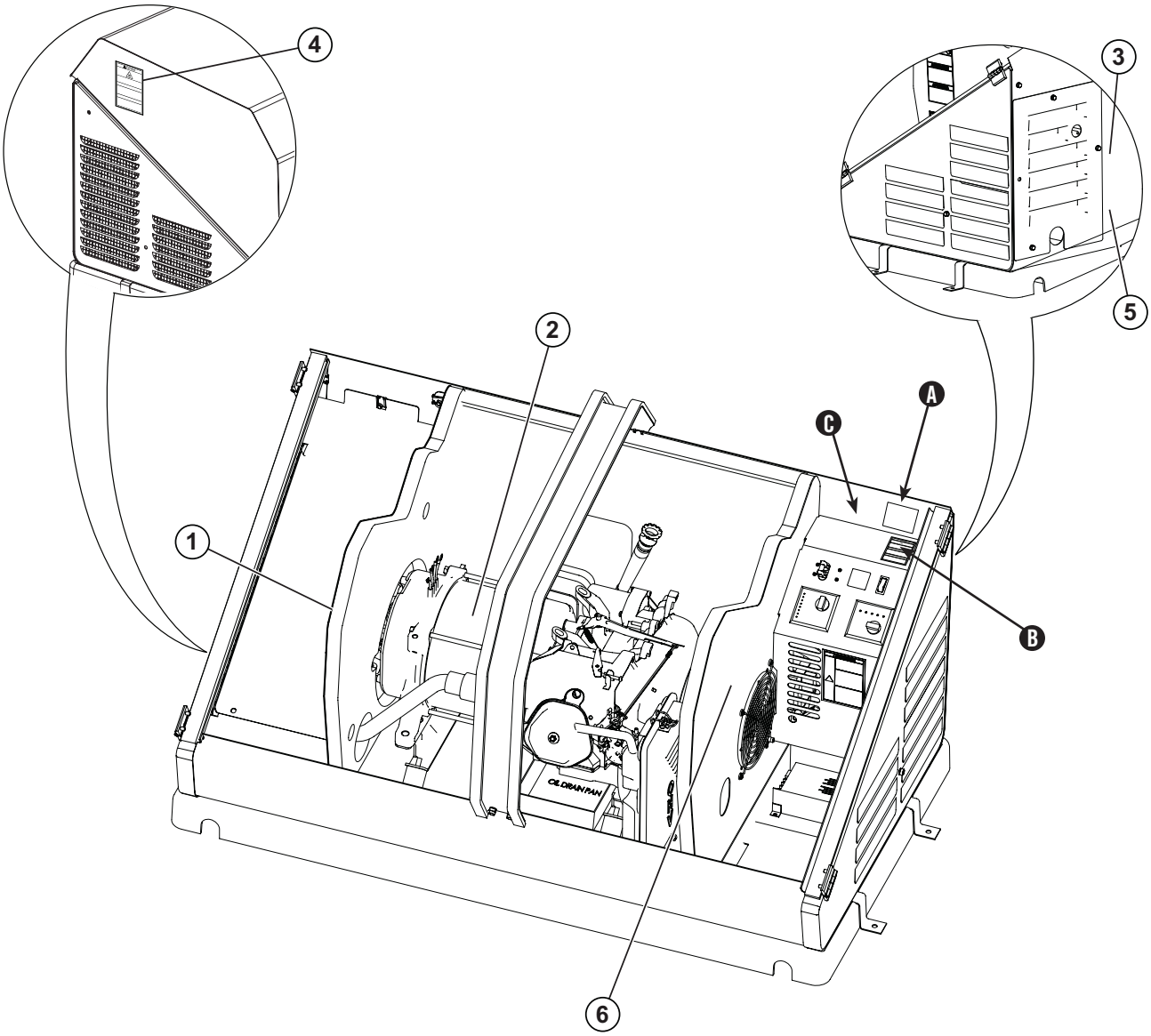

A) Serial number location

B) Nameplate

C) NFPA 37 Compliance

COMPONENT IDENTIFICATION – 8.5 KW GENERATOR

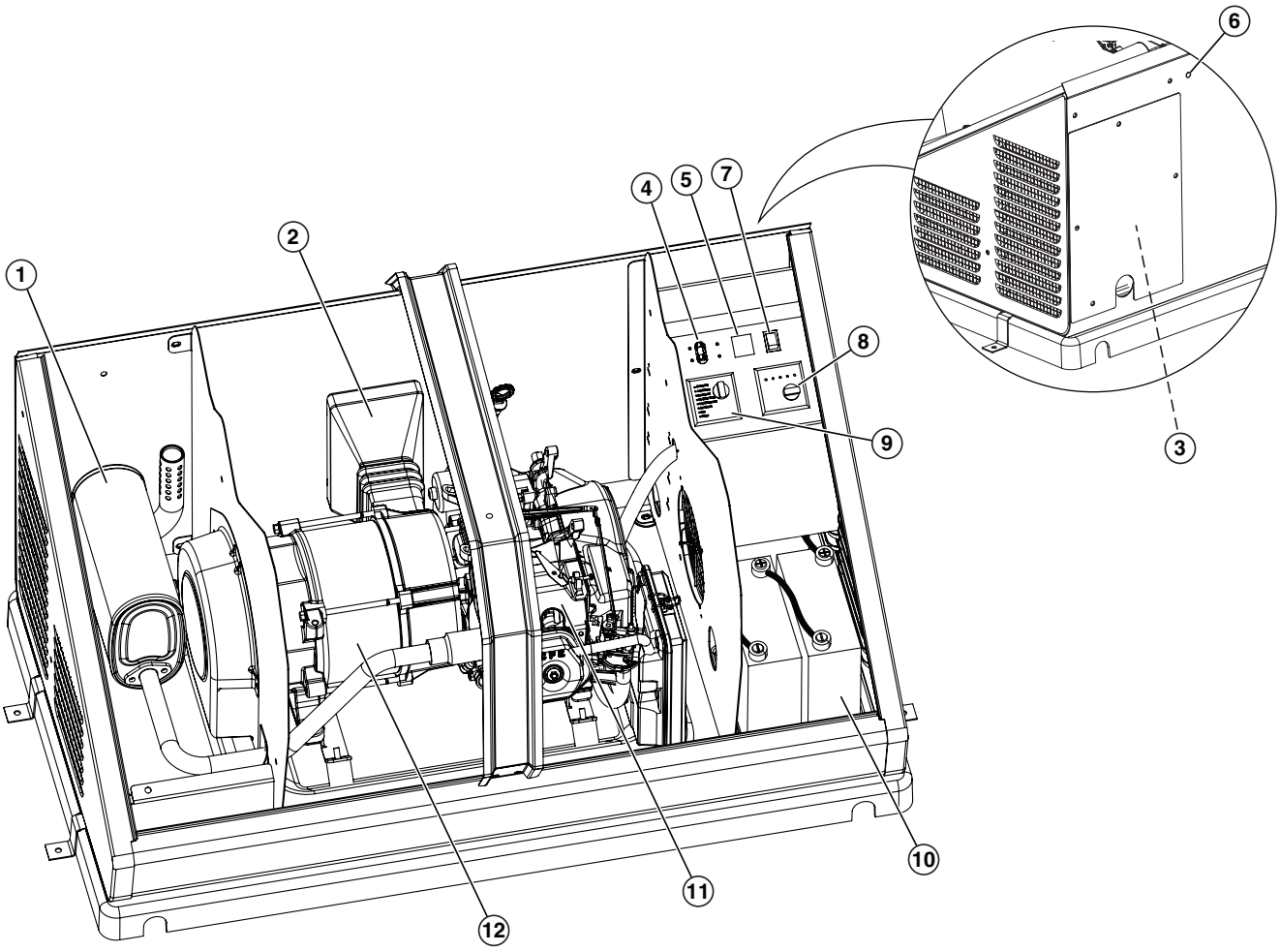

Figure 1

1. Exhaust System
2. Air Inlet
3. Fuel Regulator/Wire Connections (behind panel)
4. Main Circuit Breaker
5. Hour Meter
6. Exterior Fault Code Indicator Light
7. Exercise Switch
8. ATS Control Module
9. Engine Control Module
10. Batteries (not included)
11. Engine
12. Alternator

COMPONENT IDENTIFICATION – ENGINE

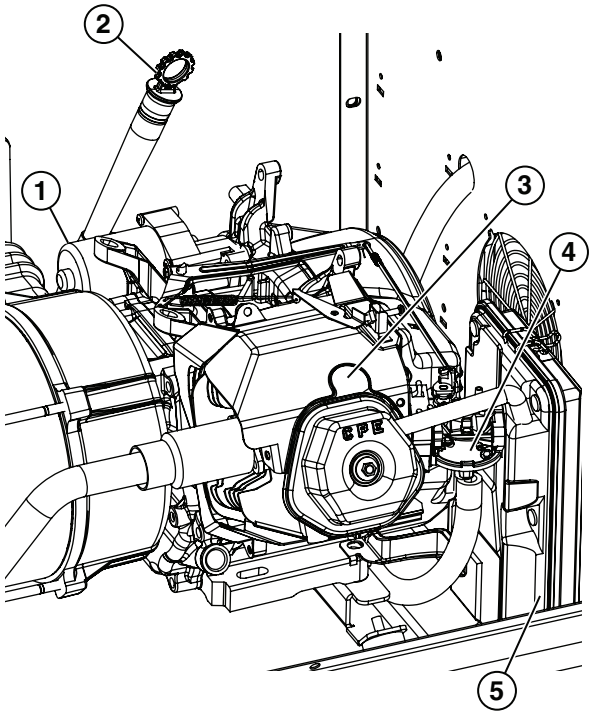

Figure 2

1. Engine Starter
2. Engine Oil Dipstick
3. Spark Plug
4. Fuel Mixture Valve
5. Air Cleaner

CONTROL PANEL

/// MAIN CIRCUIT BREAKER

The 35.5-amp main circuit breaker protects the generator from circuit overload. The main circuit breaker controls total output of the generator. (Figure 3)

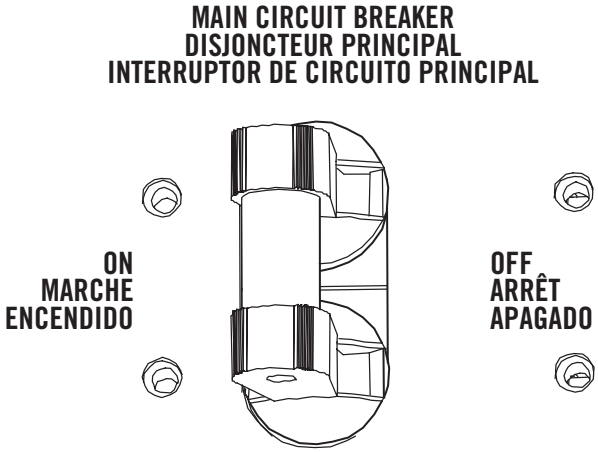

Figure 3

/// EXERCISE SWITCH

The exercise switch incorporates a built-in timer. The generator will automatically perform an exercise period once every seven days (168 hours). At the start of the exercise period, the engine will start and run for 15 minutes. Load transfer from the generator output will not occur unless the utility power is lost. When the switch is in the OFF position, the exercise function is disabled. Refer to Set Exercise Time to reset. (Figure 4)

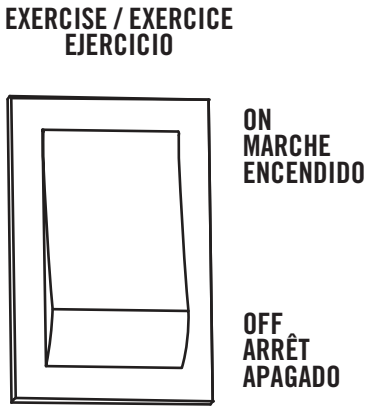

Figure 4

/// SET EXERCISE TIME

To set the exercise time, the engine control module switch must be in the ATS mode. Decide on the desired day and time to exercise the generator. Press the exercise switch to ON. The generator will start and run for 15 minutes and then shut off. The exercise time is now set. The generator will begin the next exercise period exactly 168 hours from when the exercise switch was pressed to the ON position.

If you choose to change the current exercise time setting, choose the new day and time and cycle the exercise switch from off to on and it will begin the cycle again. (Figure 4)

The exercise time will have to be reset if:

- The battery was disconnected from the generator
- The switch was moved to the OFF position for maintenance

/// HOUR METER

The generator is equipped with an hour meter that will display the generator actual run and exercise times.

/// ENGINE CONTROL MODULE

The engine control module contains the ATS/OFF/Manual mode switch and the LEDs that indicate if a generator operation is being performed or if there is an active alarm. (Figure 5)

If the exterior fault code indicator light is on, open the enclosure to view the engine control module. Determine what the fault code is and remedy the situation or have the generator serviced by an authorized Service Dealer or contact Champion Customer Service at 1-877-338-0999.

/// RESET FAULT CODE(S)

There is also an exterior fault code indicator light located on the back of the enclosure. This should be checked weekly to make sure there are no active fault codes.

The fault code(s) can be reset by placing the Engine Control Module (Figure 5) in the OFF position. This will reset fault LED, however if a fault code(s) re-occurs it must be addressed.

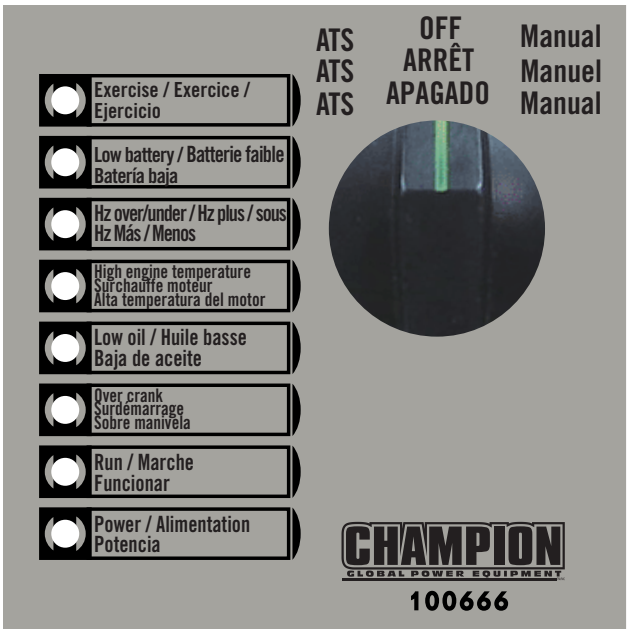

Figure 5

MODE SWITCH

- ATS – This position allows for fully automatic operation. If utility power is lost, the generator will automatically start up. It also allows the generator to automatically perform the exercise period.
- OFF – This position shuts down the engine and prevents automatic operation of the generator.
- Manual – This position allows manual starting of the engine. Load transfer from the generator output does not occur unless the utility power is lost.

EXERCISER LED

The **GREEN** LED will be flashing when the HSB is performing the weekly exercise cycle. When the exercise period has completed, the LED will stay lit and the HSB will resume standby monitoring.

LOW BATTERY LED

The **yellow** LED will be lit if the battery voltage fell below 21.0 volts for at least one minute while the engine was running. If battery voltage rises above 21.1 volts, the LED will turn off. Battery voltage is not monitored when cranking the engine.

HIGH ENGINE TEMP LED

The **red** LED will be lit if the engine operating temperature exceeds the factory preset limits. If excessive operating temperature is detected, the HSB will shut down and re-start will be disabled. The RED LEDs on the module and enclosure exterior are lit.

This failure could be the result of an excessive load or high ambient temperatures. Should this fault occur do the following;

1. Open the enclosure doors to increase air flow throughout the unit.
2. Check oil level, add oil if required.
3. Inspect the interior and exterior of the enclosure for debris, leaves, ect., and remove them to increase air flow around and inside the unit.
4. Once the engine temperature falls into the normal operating range, generally 30 minutes, follow the reset procedures in the manuals specific to your model to clear and correct fault.
5. Close the enclosure doors and the unit is ready to run.

HZ OVER / UNDER SPEED LED

The **red** LED will be lit if the engine was operating above or below its preset speed limit. The engine will shut down, and the LED will remain lit until the generator is repaired and operating correctly. Appliances connected to the generator circuit could be damaged from high generator output if the engine is allowed to operate above its preset limit. If this failure occurs, contact an authorized Service Dealer or contact Champion Customer Service at 1-877-338-0999.

LOW OIL LED

The **red** LED will be lit if the engine oil level has dropped below the safe operating level. When this happens, the engine will shut down. Check the engine oil level before attempting to restart the engine. The engine will not start until the problem is corrected.

OVER CRANK LED

The **red** LED will be lit if the engine tried to start but was unable to start in the specified time period. The engine will try to start five times and if unsuccessful the light will turn on. This may occur on initial start-up, the fuel system needs to be fully pressurized to start and operate. Follow reset procedure on page 15.

RUN LED

The **green** LED will be lit indicating the engine is running.

POWER LED

The **green** LED will be lit indicating the generator is working correctly and loads can be connected to it.

/// ATS CONTROL MODULE

The ATS control module contains the TEST/AUTO/OFF switch and LEDs that indicate type of power delivery. (Figure 6)

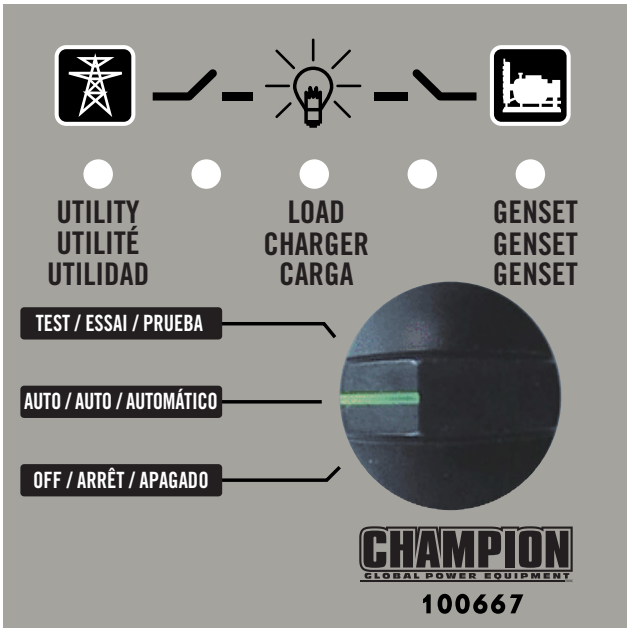

Figure 6

TEST/AUTO/OFF SWITCH

- TEST – This position allows verification that the generator power delivery circuit is functional. With the switch in the TEST position, the engine will start and the ATS will transfer. The GENSET LED, ATS LED (middle LED) and LOAD LED should be lit, indicating the generator power delivery circuit is functional.
- AUTO – This position allows automatic delivery of power from the generator if there is a utility outage. With the switch in the AUTO position and the engine not running, the UTILITY LED, ATS LED (middle LED) and LOAD LED should be lit, indicating the household is using utility provided power.
- OFF – This position will not allow any power to be delivered to the ATS when the engine is running.

BATTERY CHARGER

The LEDs on the battery charger indicate the state of the battery's charge level. Battery charger rating 24 Vdc 1.6A. (Figure 7)

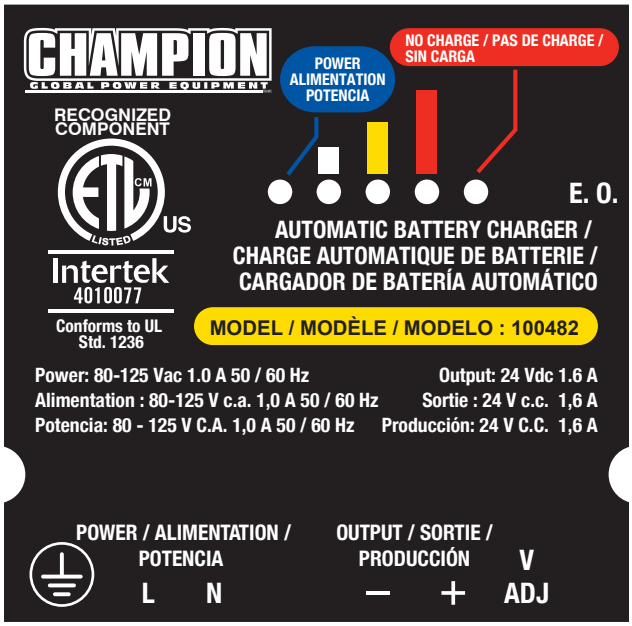

Figure 7

POWER	Lit to indicate the battery is fully charged.
Small Bar	Lit to indicate the battery is receiving a trickle charge
Middle Bar	Lit to indicate current output is near 50%.
Large Bar	Lit to indicate the charger is operating above 50% capacity.
NO CHARGE	Lit to indicate a battery charging problem. If this LED is lit, the LED on the Engine Controller module, "LOW BATTERY" will also be lit.

EMISSION REQUIREMENTS

This engine-powered generator meets all United States Environmental Protection Agency (EPA) Phase 3 requirements and is approved in both the USA and Canada.

This generator is certified to operate on pipeline NG and LPG (vapor) fuel for use as a stationary engine for standby power generation. Federal and/or local laws may be violated if it is used for any other purpose.

The maintenance schedule must be followed to ensure that the engine complies with the applicable emission standards for the duration of the engine's life.

The following components on the engine consist of the emission control system:

- Fuel metering system – mixer and fuel regulator
- Air induction system – air cleaner housing and element
- Ignition system – spark plug and ignition module

The emissions compliance period for which the engine has been shown to meet federal emission requirements is stated on the emission compliance label attached to the engine. Emission Control System Warranty found at the end of this manual.

SPECIFICATIONS

Home standby generator	
Maximum continuous power, LPG	8.5 kW
Maximum continuous power, NG	7.5 kW
Rated voltage	120/240
Amps	70.8/35.4 LPG, 62.5/31.25 NG
Harmonic distortion	Less than 5%
Main line circuit breaker	35.5 amp
Phase	Single
Frequency	60 Hz
Unit weight	365.1 lb. (165.6 kg)
Size (L x W x H)	49.1 x 28 x 28.3 in. (124.7 x 71 x 72 cm)
Engine	
Type	Champion OHV
No. of cylinders	1
Displacement	439 cc
Cylinder block	Aluminum with cast-iron sleeve
Ignition system	Solid state – magneto
Spark plug	F7RTC (NGK BPR7ES)
Governor	Mechanical
Starter	Electric 24V DC
Oil capacity	1.2 qt (1.1 L)
Oil Type	5W-30 Full Synthetic*
RPM	3600
Controls	
Mode switch auto	Auto start on utility failure
Mode switch manual	Starts on demand
Mode switch off	Stops unit/control and charger active
Ready to run/maintenance messages	Standard
Programmable start delay	Standard
Engine start sequence	Standard
Starter lockout	Standard
Battery charger/low battery indicator	Standard
Charger fault	Standard
AVR over voltage protection	Standard
Low oil protection	Standard
Safety fused	Standard
Overcrank/overspeed/underspeed protection	Standard

*Unit ships without oil. Add oil before starting the HSB.

FUEL SYSTEM

The engine is fitted with a dual master mixer assembly carburetion system, which allows it to run on either NG or LPG. It has been configured at the factory to run on NG. If your installation requires the engine to run on LPG, orifices in the master mixer assembly carburetor must be changed.

BATTERY REQUIREMENTS

Two (2) 12 volt Group U1 batteries with a minimum of 350 CCA each. Battery size: 7 3/4 L x 5 3/16 W x 7 5/16 H inches (196mm L x 131mm W x 185mm H). This is based on testing in extreme cold and heat -22° F (-30° C) to 104 ° F (40° C). Purchase batteries locally. Install positive cable first.

Install a cable from the positive (+) terminal of one battery to the negative (–) terminal of the other battery. Always connect the positive (+) battery cable to the generator first. (Figure 8)

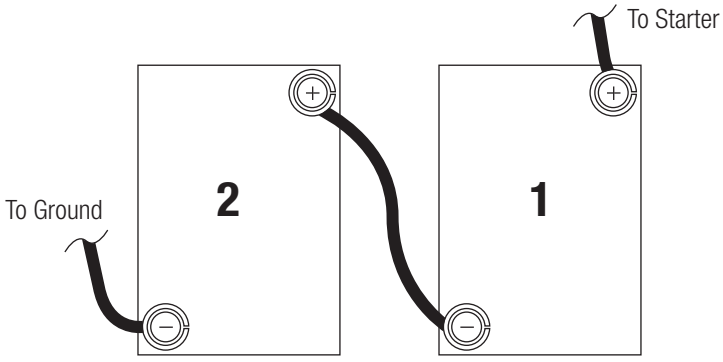

Figure 8

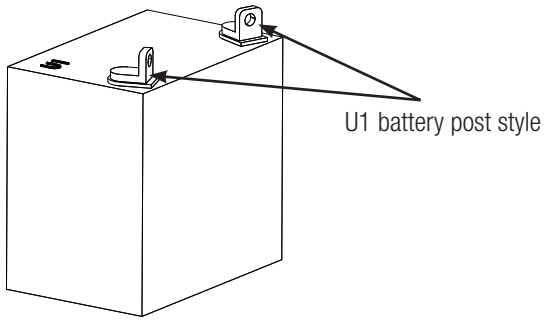

⚠ CAUTION

For battery installation, maintenance, and safety requirements refer to purchased manufacturer battery installation and safety manual.

BATTERY CHARGING

The generator is equipped with an automatic battery charger. The charger will sense the battery's state of charge and automatically charge the battery when required. LED lights on the charger display the battery state of charge. *See Figure 7 on page 19.*

MODEL AND SERIAL NUMBER

The model and serial number plate is affixed to the generator above the control panel. Have this information if calling for service or ordering parts. (Figure 9)

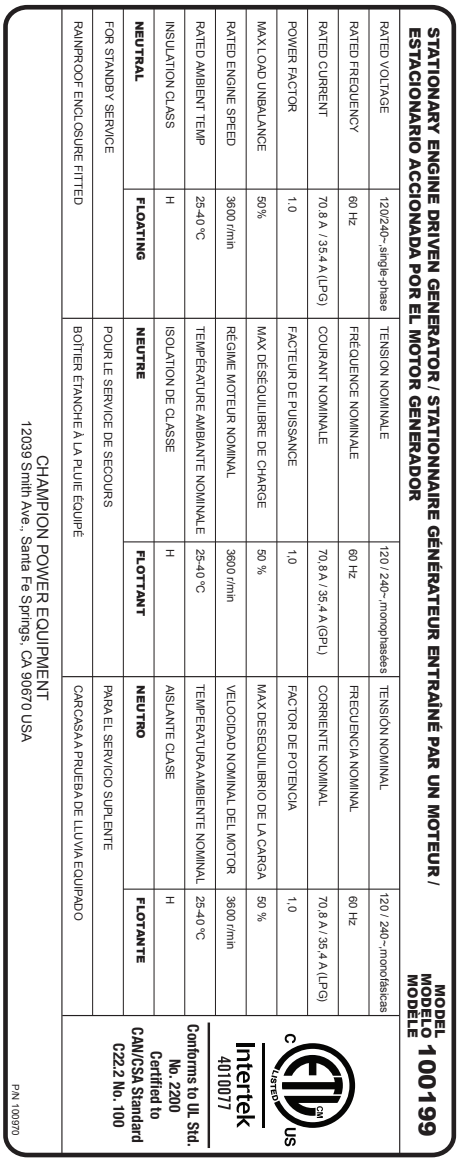

STATIONARY ENGINE DRIVEN GENERATOR / STATIONNAIRE GÉNÉRATEUR ENTRAÎNÉ PAR UN MOTEUR / ESTACIONARIO ACCIONADA POR EL MOTOR GENERADOR

MODEL / MODÈLE / MODELO **100199**

RATED VOLTAGE	120/240~,single-phase	TENSION NOMINALE	120 / 240~,monophasées	TENSIÓN NOMINAL	120 / 240~,monofásicas
RATED FREQUENCY	60 Hz	FRÉQUENCE NOMINALE	60 Hz	FRECUENCIA NOMINAL	60 Hz
RATED CURRENT	70.8 A / 35.4 A (LPG)	COURANT NOMINALE	70.8 A / 35.4 A (GPL)	CORRIENTE NOMINAL	70.8 A / 35.4 A (LPG)
POWER FACTOR	1.0	FACTEUR DE PUISSANCE	1.0	FACTOR DE POTENCIA	1.0
MAX LOAD UNBALANCE	50%	MAX DÉSÉQUILIBRE DE CHARGE	50 %	MAX DESEQUILIBRIO DE LA CARGA	50 %
RATED ENGINE SPEED	3600 r/min	RÉGIME MOTEUR NOMINAL	3600 r/min	VELOCIDAD NOMINAL DEL MOTOR	3600 r/min
RATED AMBIENT TEMP	25-40 °C	TEMPÉRATURE AMBIANTE NOMINALE	25-40 °C	TEMPERATURA AMBIENTE NOMINAL	25-40 °C
INSULATION CLASS	H	ISOLATION DE CLASSE	H	AISLANTE CLASE	H
NEUTRAL	**FLOATING**	**NEUTRE**	**FLOTTANT**	**NEUTRO**	**FLOTANTE**
FOR STANDBY SERVICE		POUR LE SERVICE DE SECOURS		PARA EL SERVICIO SUPLENTE	
RAINPROOF ENCLOSURE FITTED		BOÎTIER ÉTANCHE À LA PLUIE ÉQUIPÉ		CARCASA A PRUEBA DE LLUVIA EQUIPADO	

CHAMPION POWER EQUIPMENT
12039 Smith Ave., Santa Fe Springs, CA 90670 USA

Intertek 4010077
Conforms to UL Std. No. 2200
Certified to CAN/CSA Standard C22.2 No. 100

P/N 100970

Figure 9

OPERATION

Before operating the generator, review *SAFETY section starting on page 7*.

ENCLOSURE AND ACCESS

Open the enclosure to gain access to the generator and its components. (Figure 10) Unlock the handles. Turn the handles and lift the hoods up and to the outside.

Figure 10

PRE-START CHECKLIST

To make sure the generator is ready for proper operation, the following items should be checked:

- Fuel valve is in the ON position
- No fault code LEDs are lit
- Battery is at full charge
- ATS control module is in the AUTO position
- Engine control module is in the ATS position
- Transfer switch lever is in the Utility Power position

TURNING OFF THE GENERATOR

If you need to shut off the generator when it is running, turn the engine control module switch to the OFF position. This will shut off the engine. With the engine control module in the OFF position, the generator will not start, even if there is loss of utility power.

Before performing maintenance procedures, review *SAFETY section starting on page 7*.

Ensure that the ATS and Engine Switches are in the OFF position before performing any maintenance or cleaning.

SCHEDULED MAINTENANCE CHART

	First 5 Hours of Operation	Weekly	Monthly	Every 2 Years or 100 Hours of Operation
Change engine oil	√			√**
Check engine oil level			√*	
Inspect fuel lines and connections			√	
Check exterior fault code indicator light		√		
Inspect and clean enclosure louvers		√		
Inspect and clean battery terminals			√	
Inspect and clean engine air cleaner				√**
Inspect engine spark plug				√
Complete inspection of generator and engine tune-up				√***

* Monthly or 24 hours of continuous operation

** Service sooner if operating in high ambient temperatures or a dusty and dirty environment.

*** Maintenance should be performed by your service dealer.

ENGINE OIL

/// ENGINE OIL REQUIREMENTS

Use American Petroleum Institute (API) Service Class SN or better. Do not use special additives. All temperatures full synthetic 5W-30.

Over 32 °F (0 °C)	SAE 30
40 °F to -10 °F (4 °C to -23 °C)	10W-30
10 °F or less (-12 °C or less)	Synthetic 5W-30

/// CHECKING THE ENGINE OIL LEVEL

Check the oil level daily when the generator is running for an extended period of time.

1. If the generator is running during a utility outage, turn off all household loads.
2. Turn the engine control module switch to the OFF position.
3. Remove the dipstick. Wipe it dry with a clean cloth and completely reinsert it into the dipstick tube. See figure 12, page 24.

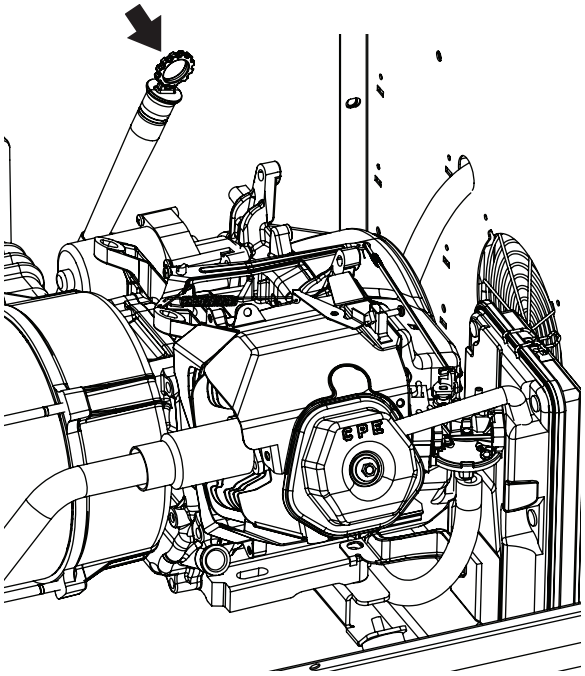

Figure 11

NOTICE

DO NOT overfill the engine with engine oil. Damage to the engine may occur.

4. Remove the dipstick. The oil level should be at the FULL mark. If necessary, add oil. DO NOT overfill.

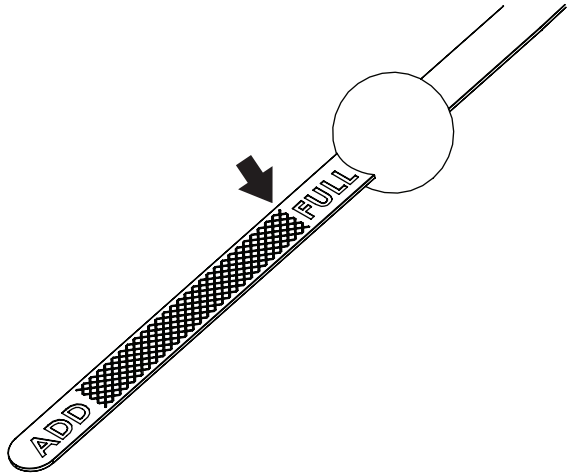

Figure 12

5. Install the dipstick.
6. Turn the engine control module switch to its prior position.

/// CHANGING THE ENGINE OIL

⚠ WARNING

Always wear protective glasses or goggles and protective clothing when changing hot engine oil.

1. Turn the ATS to the OFF position.
2. Turn the engine control module switch to the MANUAL position.
3. Allow the engine to run until it reaches operating temperature.
4. Turn the engine control module switch to the OFF position.

NOTICE

Always be environmentally responsible. Consult the local authorities or reclamations facility for proper disposal of engine oil waste.

5. Position drain pan under alternator.
6. Loosen hose clamp on oil drain hose and slide drain hose off retaining pin. (Figure 13)

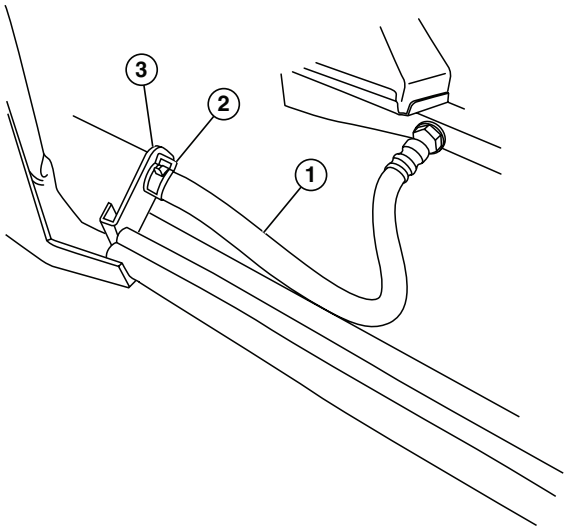

Figure 13

1. Oil Drain Hose
2. Hose Clamp
3. Retaining Pin

7. Position drain hose into drain pan and allow crankcase to empty.
8. Reinstall the hose onto the retaining pin and reposition hose clamp.
9. Fill the engine with the proper amount of engine oil. *See Figure 12.*
10. Turn the engine control module switch to its prior position.
11. Turn the ATS to the AUTO position.

INSPECT AND CLEAN ENGINE AIR CLEANER

1. Turn the engine control module switch to the OFF position.
2. Unsnap the clips holding the air cleaner cover in place and remove the air cleaner cover.
3. Remove the paper element.

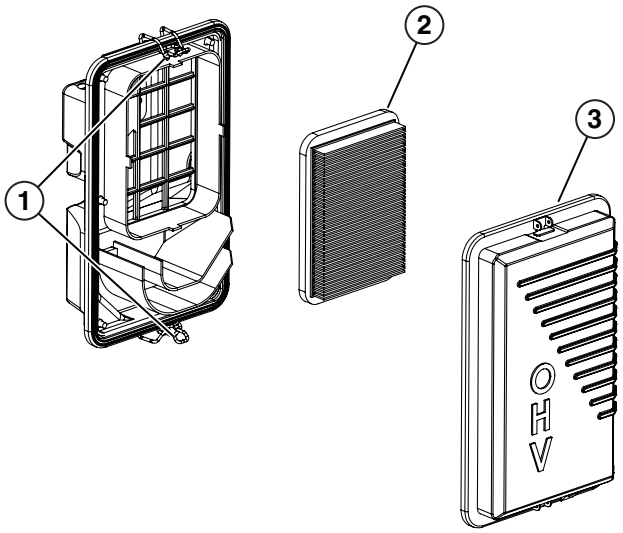

Figure 14

1. Air Cleaner Cover Clips
2. Paper Element
3. Air Cleaner Cover

4. Inspect the paper element for any rips or tears. Replace if damaged.
5. Hold the paper element up to a light. You should be able to see light through the paper element, if not replace the element. Inspect air cleaner cover, remove any dirt or debris.
6. Install paper element in the air cleaner housing with the pleats facing towards the air cleaner cover.
7. Install the cover and snap the clips in place.
8. Turn the engine control module switch to its prior position.

SPARK PLUG

1. Turn the ATS to the OFF position.
2. Turn the engine control module switch to the OFF position.
3. Remove the spark plug cable from the spark plug.
4. Clean the area around the spark plug to keep dirt out of the engine and remove the spark plug.
5. Inspect the spark plug electrode and replace the plug if the electrode shows signs of deterioration.
6. Check the gap before installing the spark plug. The spark plug gap should be 0.028 – 0.031 in. (0.7 – 0.8 mm).

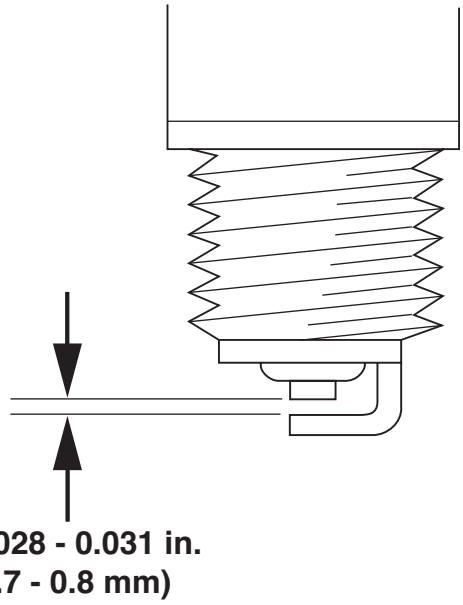

Figure 15

7. Carefully thread the spark plug into the engine and tighten to 20-30 N-m (14.8-22.1 lbf-ft).
8. Re-connect the spark plug cable.
9. Turn the engine control module switch to its prior position.
10. Turn the ATS to the AUTO position.

BATTERY MAINTENANCE

1. Turn the engine control module switch to the OFF position.
2. Inspect the battery cables and terminals for corrosion.
3. Check that the cables are securely fastened to the terminals.
4. Check the ground lug and make sure the connections are tight.
5. Check the fluid level of the battery, unless sealed. If low, top off the level using distilled water only.

Follow all battery instructions provided by the battery manufacture.

CORROSION PROTECTION

NOTICE

Never use a pressure washer to wash the interior of the generator with water.

Wash the outside of the enclosure using a mild soap and water. Use an automotive-type wax and wax the outside of the enclosure to protect it from the elements. If used in a salt water/coastal area, the enclosure should be washed more frequently to prevent corrosion. Spray light oil on the hinges for the enclosure doors.

MAINTENANCE AFTER SUBMERSION

⚠ WARNING

Never try to start or operate the generator if it has been submerged underwater or exposed to a flood.

If the generator has been in conditions where it became submerged underwater, the generator must be inspected and maintenance must be performed before returning the generator to service.

Turn engine control module and ATS control module to the OFF position. Have a authorized Champion Dealer inspect the generator and perform any necessary maintenance.

If the house or building has been exposed to a flood, it should be inspected by a certified electrician for any electrical problems that may occur if the generator is put back into service or if utility power is restored.

STORAGE

If the generator is not going to be used for several months and not exercised every 7 days, it should be prepared for storage.

1. Manually start the engine and run it for several minutes to allow it to warm up.
2. With the engine running, turn the fuel shutoff valve to the closed position and let the engine continue to run until it shuts down.
3. Once the engine has shut down, turn the engine control module switch and the ATS control module switch to the OFF position.
4. Switch the generator's main circuit breaker to the OFF (OPEN) position.
5. Turn off the utility power to the transfer switch.
6. Disconnect the battery cables. Remove the negative cable first.
7. Change the engine oil. *See CHANGING THE ENGINE OIL on page 24.*
8. Remove the spark plug and spray fogging oil into the spark plug hole. Install the spark plug and tighten.
9. Thoroughly wash and wax the exterior of the generator enclosure. Do not use a pressure washer.

RETURN TO SERVICE AFTER STORAGE

1. Make sure the utility power to the transfer switch is off.
2. The engine control module switch and the ATS control module switch should be in the OFF position.
3. Check the engine oil level. Add oil if needed.
4. Recharge the batteries to 100% state of charge. If the batteries will not fully charge, replace the batteries.

⚠ WARNING

Always connect the positive (+) battery cable first. After the positive cable is connected, then the negative (-) battery cable can be attached. This minimizes the possibility of electrical contact.

5. Connect the positive (+) battery cable to the positive (+) battery terminal first and then connect the negative battery cable to the negative (-) battery terminal.
6. Clean and wipe down the generator with mild soap and water.
7. Turn the fuel shutoff valve to the ON position.
8. Turn the engine control module switch to the manual position. The engine should start. Run the engine for 15 minutes to allow it to warm up. The fuel system might require more than one start cycle to fully pressurize the fuel system for operation.
9. Make sure there are not any active fault codes.
10. Turn the engine control module switch to the OFF position to shut off the engine.
11. Turn the ATS module switch to the AUTO position.
12. Turn on the utility power to the transfer switch. The utility LEDs on the ATS module should be lit.
13. Turn the engine control module switch to the ATS position.
14. Set the exercise time. *See EXERCISE SWITCH on pages 16 and 17.*

MAINTENANCE

/// ENGINE PARTS

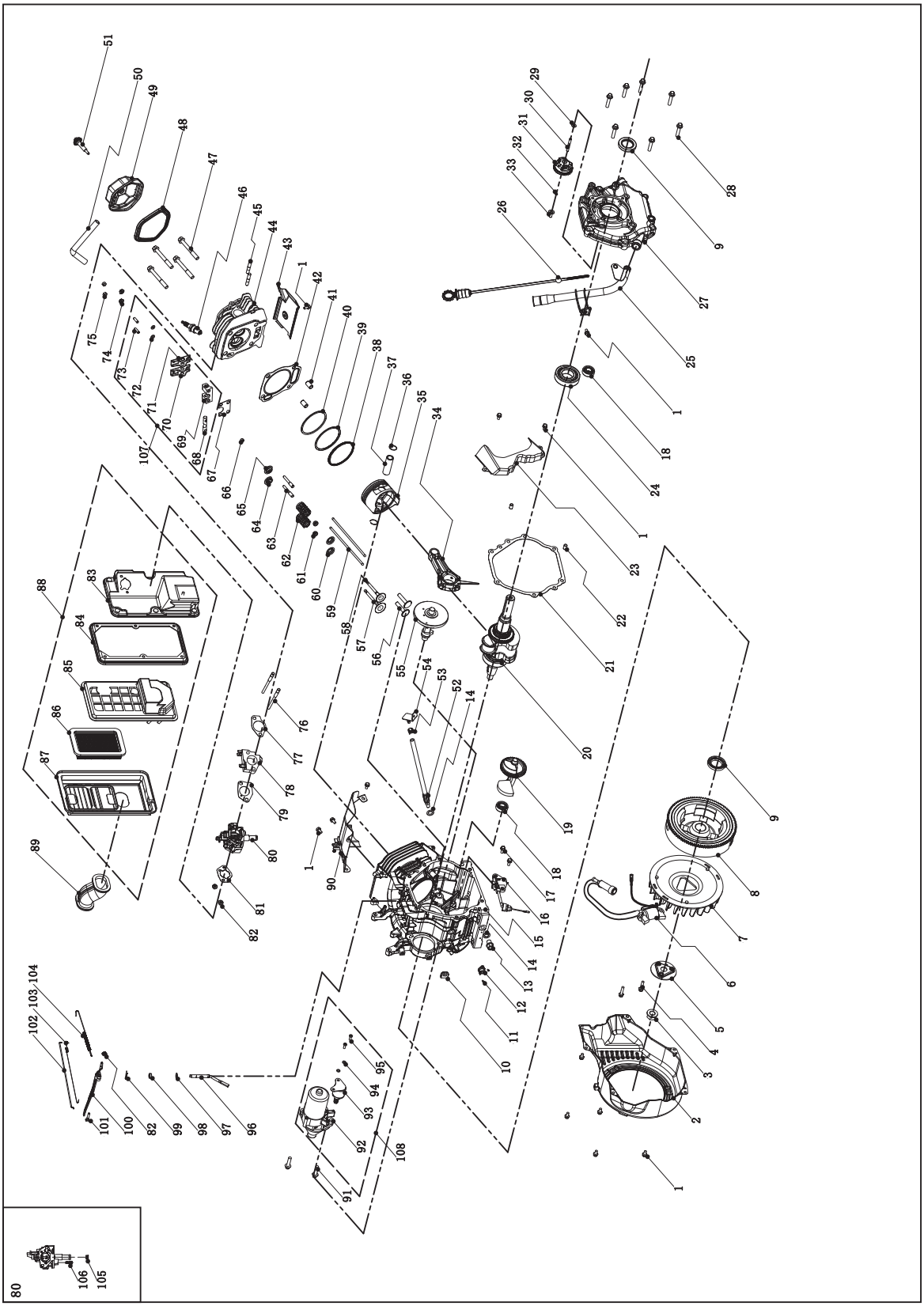

MAINTENANCE

#	Part Number	Description	Qty
1	1.5789.0612	Flange Bolt M6 × 12	12
2	47.080100.01.2	Fan Cover, Black	1
3	2.02.007	Nut M16 × 1.5	1
4	1.5789.0629	Flange Bolt M6 × 29	2
5	47.080005.00	Plate, Fan	1
6	46.123000.01	Ignition Coil	1
7	47.080001.00	Cooling Fan	1
8	46.120100.07	Flywheel, Electric Start	1
9	2.11.007	Oil Seal, Ø35 × Ø52 × 8	2
10	45.030032.00	Sheath, Wire	1
11	1.823.0306.1	Screw M3 × 6	2
12	5.1050.001	Switch, Oil Temperature, 105°C	1
13	2.08.039	Drain Bolt, M12 × 1.5 × 15	1
14	2.03.023	Washer, Ø12.5 × Ø20 × 2	2
15	47.030100.04	Crankcase	1
16	45.127000.02	Oil Level Sensor	1
17	1.5789.0615	Flange Bolt M6 × 15	2
18	1.276.6202	Bearing 6202	2
19	47.050006.00	Weight Balancer	1
20	47.050100.01	Crankshaft	1
21	46.030008.00	Gasket, Crankcase Cover	1
22	2.04.001	Dowel Pin, Ø9 × 14	2
23	46.080600.00	Air Guide, Right Side	1
24	1.276.6207	Bearing 6207	1
25	47.031100.00	Tube, Oil Dipstick	1
26	47.031300.00.48	Dipstick Assembly, Yellow	1
27	45.030007.03	Cover, Crankcase, LPG/NG	1
28	1.5789.0840	Flange Bolt M8 × 40	7
29	2.03.021.1	Washer, Ø6.4 × Ø13 × 1, Black	1
30	45.110013.00	Shaft, Governor Gear	1
31	45.110100.00	Gear, Governor	1
32	21.110011.00	Clip, Governor Gear	1
33	45.110012.00	Bushing, Governor Gear	1
34	47.050200.00	Connecting Rod	1
35	47.050005.01	Piston	1
36	2.09.004	Circlip, Ø21 × Ø1	2
37	45.050003.00	Pin, Piston	1
38	46.050303.02	Ring, Oil	1
39	46.050302.02	Ring, Second Piston	1
40	46.050301.02	Ring, First Piston	1
41	2.04.004	Dowel Pin, Ø12 × 20	2
42	47.030009.00	Gasket, Cylinder Head	1
43	46.080400.00	Air Guide, Lower	1
44	47.010100.04	Cylinder Head	1
45	2.01.010	Stud Bolt M8 × 35	2
46	2.15.008(F7RTC)	Spark Plug, F7RTC	1
47	2.08.122	Flange Bolt M10 × 95	4
48	46.020002.00	Gasket, Cylinder Head Cover	1
49	47.021000.00	Cylinder Head Cover, CPE	1
50	45.020001.02	Breather Tube	1
51	47.020100.00	Bolt, Cylinder Head Cover	1
52	45.032000.00	Fuel Guide Assembly	1
53	2.06.013	Clamp, Ø13.5 × b10	1
54	45.030200.00	Support	1
55	47.041000.02	Camshaft	1
56	45.040013.00	Lifter, Valve	2
57	47.040002.00	Valve, Intake	1

#	Part Number	Description	Qty
58	47.040006.00	Valve, Exhaust	1
59	46.040005.00	Push Rod	2
60	45.040015.00	Retainer, Valve Spring	2
61	45.040017.00	Oil Seal, Valve	2
62	45.040003.00	Spring, Valve	2
63	23.040010.00	Bolt, Rocker Arm	2
64	45.040001.00	Retainer, Intake Valve Spring	1
65	45.040007.00	Retainer, Exhaust Valve Spring	1
66	45.040008.00	Rotator, Exhaust Valve	1
67	46.040004.00	Guide Plate, Push Rod	1
68	46.040016.00	Shaft, Rocker Arm	1
69	46.040201.00	Retainer, Rocker Arm	1
70	46.040009.00	Rocker Arm, Intake Valve	1
71	46.040018.00	Rocker Arm, Exhaust Valve	1
72	1.97.1.06	Washer Ø6	2
73	22.040012.00	Screw, Valve Adjustment	2
74	1.6177.1.06	Lock Nut M6, Flange	2
75	21.040021.00	Nut M6 × 0.5, Lock	2
76	2.01.008	Stud Bolt M6 × M8 × 105	2
77	46.130002.20	Gasket, Insulator	1
78	45.130001.00	Insulator, Carburetor	1
79	46.130003.20	Gasket, Carburetor	1
80	161.133000.00	Master Mixer Assembly, LPG/NG	1
81	46.130004.20	Gasket, Air Cleaner	1
82	1.6177.06	Flange Nut M6	3
83	46.091100.03	Base, Air Cleaner	1
84	45.091002.20	Seal, Air Cleaner	1
85	45.091001.20	Separator, Air Cleaner	1
86	47.091300.00	Element, Air Filter UI Paper	1
87	47.091200.00	Cover, Air Cleaner	1
88	47.091000.00	Air Cleaner Assembly	1
89	47.090004.00	Pipe, Air Cleaner	1
90	46.080300.20	Air Guide, Upper	1
91	1.5789.0835	Flange Bolt M8 × 35	2
92	46.125100.03	Starter Motor	1
93	46.125200.03	Relay, Starter	1
94	1.93.05	Lock Washer Ø5	2
95	1.16674.0516	Flange Bolt M5 × 16	2
96	45.110001.00	Shaft, Governor Arm	1
97	2.03.019	Washer, Ø8.2 × Ø17 × 0.8	1
98	2.11.006	Oil Seal, Ø7 × Ø14 × 5	1
99	45.110008.00	Pin, Shaft	1
100	45.110003.00	Arm, Governor	1
101	2.08.040	Bolt M6 × 21, Governor Arm	1
102	45.110006.00	Rod, Governor	1
103	45.110005.00	Spring, Throttle Return	1
104	45.110007.00	Spring, Governor	1
105	161.133029.00	Metering Jet, Main, LPG	1
	161.133029.01	Metering Jet, Main, NG	1
106	161.133030.00	Metering Jet, Idle, LPG	1
	161.133030.01	Metering Jet, Idle, NG	1
107	46.040200.00	Rocker Arm Assembly	1
108	46.125000.03	Starter Motor Assembly	1

MAINTENANCE

/// ENCLOSURE AND ASSEMBLIES

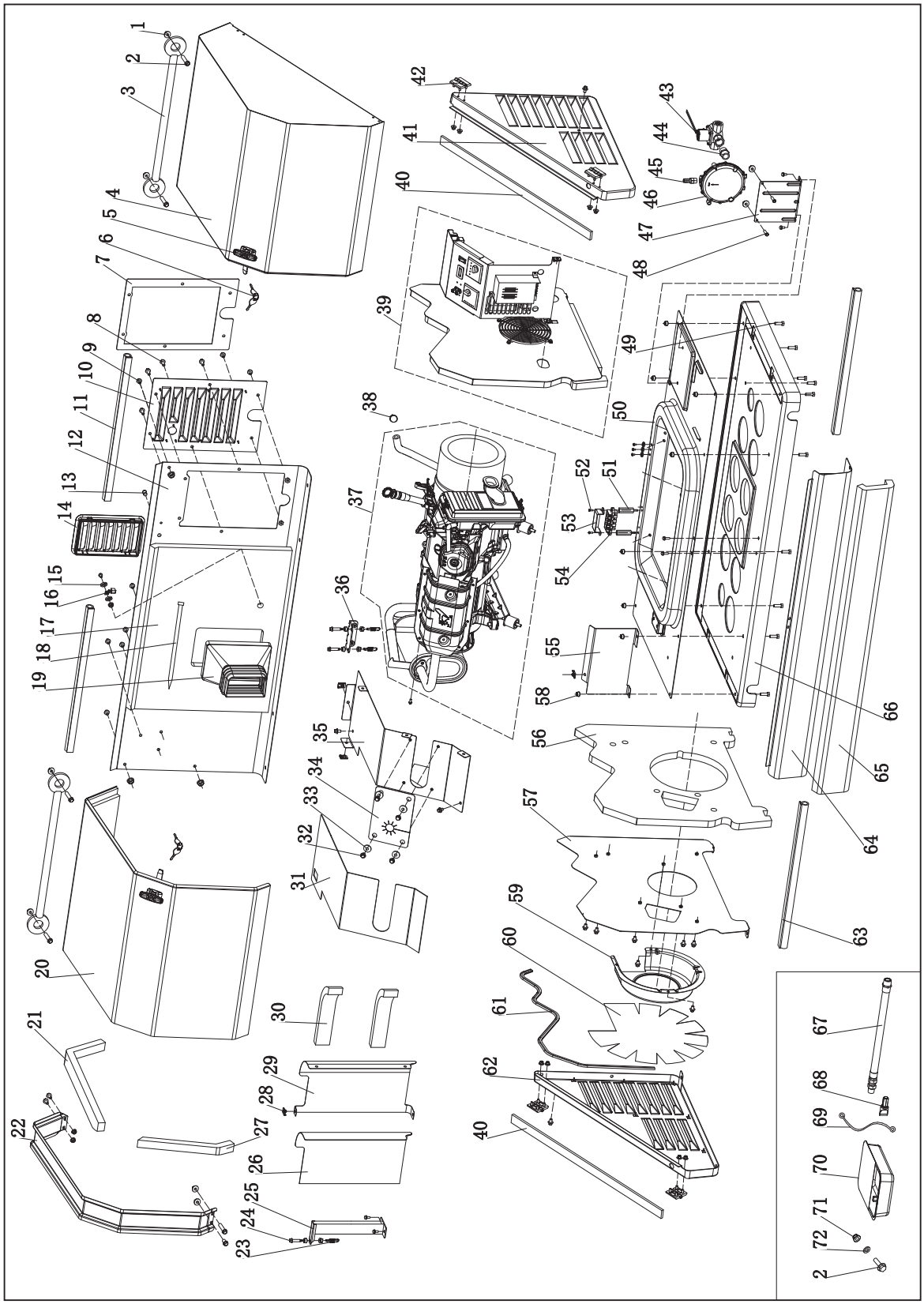

#	Part Number	Description	Qty
1	1.6177.1.06	Flange Lock Nut M6	23
2	1.5789.0615	Flange bolt, M6 x 15	9
3	161.200507.00	Curb Chain Assembly, Cover	2
4	161.200500.61.24	Top Cover Assembly, Right, Silk Grey, Flame Retardant and Textured	1
5	161.200110.00	Hook Lock Assembly	2
6	161.200110.00.01	Key, Hook Lock	2
7	161.200021.16.6	Seal, Access Cover, Flame Retardant	1
8	1.16674.0820	Flange bolt, M8 x 20	9
9	1.16674.0812	Flange bolt, M8 x 12	26
10	161.200402.60.24	Access Cover, Electric Cabinet, Silk Grey, Flame Retardant and Textured	1
11	161.200109.63	Rubber Strip, 575 mm, Flame Retardant	2
12	161.200401.60.24	Rear Cover, Silk Grey, Flame Retardant and Textured	1
13	5.1460.015	Indicator Light, 24 v	1
14	161.192100.60	Supporter, Air Guide, Alternator, Flame Retardant	1
15	1.862.06	Toothed Lock Washer, Ø6	5
16	5.1560.000	Ground Wire Teminal, Ø6, UL	1
17	161.200021.05.6	Acoustic Panel, Rear Center Chamber, Flame Retardant	1
18	9.3410.02	Nylon Cable Ties, 5 x 500 mm	1
19	161.192300.00	Air Guide, Alternator	1
20	161.200500.60.24	Top Cover Assembly, Left, Silk Grey, Flame Retardant and Textured	1
21	161.200021.17.6	Seal Strip, Top Cover, Long, 625 x 50 x 25 mm, Flame Retardant	1
22	161.201600.02.1	Gutter, Black	1
23	161.100006.00	Spring, Muffler	3
24	2.08.119	Flange Bolt M8 x 35, Muffler	3
25	161.1010005.01.2	Supportor, Muffler, Bottom, Black	1
26	161.200021.13.6	Acoustic Panel, Muffler Cover, Front, Flame Retardant	1
27	161.200021.18.6	Seal Strip, Top Cover, Short, 50 x 320 x 25 mm, Flame Retardant	1
28	2.02.032	Cage Nut, M8	4
29	161.200017.63.24	Muffler Cover, Back, Silk Grey, Flame Retardant and Textured	1
30	161.200021.15.6	Foams, Muffler Cover, Back, Flame Retardant	2
31	161.200021.06.6	Acoustic Panel, Muffler Cover, top, Flame Retardant	1
32	1.5789.0612	Flange Bolt, M6 x 12	8
33	2.03.004	Washer, Ø24 x Ø6.5 x 1.5	4
34	161.200017.02	Thermal Baffle	1
35	161.200017.60.24	Muffler Cover, Top, Silk Grey, Flame Retardant and Textured	1

#	Part Number	Description	Qty
36	161.1010005.00.2	Supportor, Muffler, Top, Black	1
37	100199.901.V1.3	Generator Assembly	1
38	2.06.035	Clamp, Ø23.5	1
39	100199.902.V1.3	Control Panel Assembly	1
40	161.200021.02.6	Seal Strip, Right/Left Cover, Flame Retardant	2
41	161.200300.60.24	Right Cover Assembly, Silk Grey, Flame Retardant and Textured	1
42	161.201900.00	Hinge	4
43	161.134100.00	Solenoid Valve, LPG/NG	1
44	161.133106.01	Nipple, NPT 3/4	1
45	161.133106.00	Nipple, NPT 3/8	1
46	161.136000.00	Pressure Reducing Valve, LPG/NG	1
47	161.200018.00	Supportor, Pressure Reducing Valve	1
48	1.5789.0629	Flange bolt, M6 x 29	6
49	1.5783.0825	Bolt, M8 x 25	8
50	161.200601.60.24	Base Center, Silk Grey, Flame Retardant and Textured	1
51	2.08.133	Male Female bolt, M5 x 50	2
52	1.16674.0516	Flange bolt, M5 x 16	2
53	161.210018.00	Cover, Terminal Block	1
54	161.210011.02	Terminal Block, 60A, 90° Angle	1
55	161.200017.61.24	Muffler Cover, Front, Silk Grey, Flame Retardant and Textured	1
56	161.200021.03.6	Acoustic Panel, Left Firewall, Flame Retardant	1
57	161.200005.61.24	Firewall, Left, Silk Grey, Flame Retardant and Textured	1
58	1.6177.1.08	Flange Lock Nut, M8	21
59	161.192300.01.2	Fan Cover, Rotor, Black	1
60	161.200021.12.6	Foams, Fan Cover, Flame Retardant	1
61	161.200109.61	Rubber Strip, 1120 mm, Flame Retardant	1
62	161.200200.60.24	Left Cover, Silk Grey, Flame Retardant and Textured	1
63	161.200109.62	Rubber Strip, 530 mm, Flame Retardant	2
64	161.200101.60.24	Front Cover, Silk Grey, Flame Retardant and Textured	1
65	161.200021.11.6	Foams, Front Cover, Flame Retardant	1
66	161.201800.00	Plastic Pallet, PP	1
67	163.130021.01	LPG Hose With NPT3/4 Nipple	1
68	9.1120.001	Screwdriver, Jet	1
69	5.1900.074	Battery Jump Wire, 275 mm, 6 AWG	1
70	161.200023.00.1	Oil Container, Black	1
71	1.6182.06	Lock Nut M6, Flange	4
72	1.97.1.06	Washer, Ø6	4

MAINTENANCE

/// ALTERNATOR AND EXHAUST SYSTEM

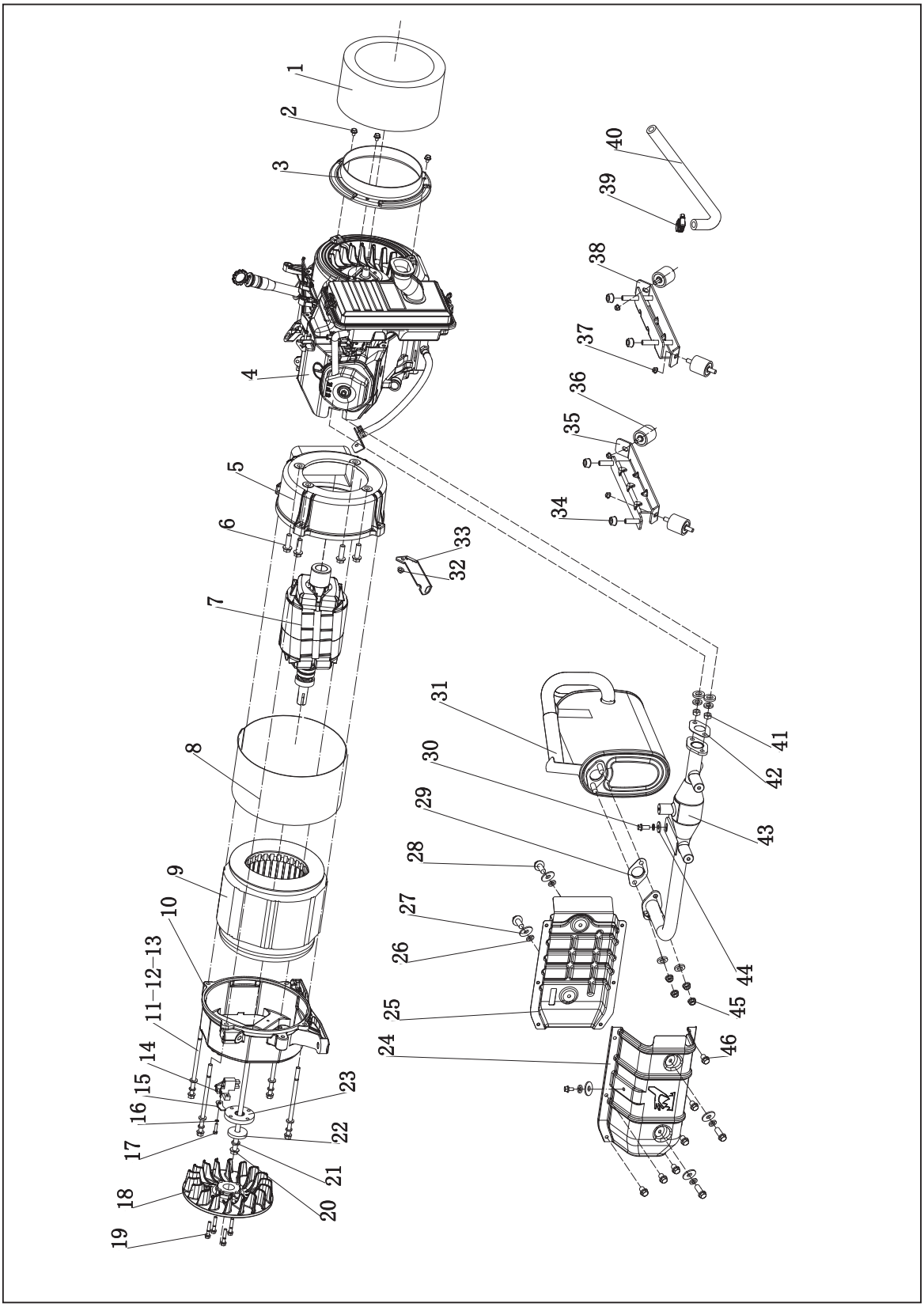

MAINTENANCE

#	Part Number	Description	Qty
1	161.200021.00.6	Foams Ring, Engine Fan, Flame Retardant	1
2	1.5789.0608	Flange Bolt, M6 X 8	3
3	161.200024.00.1	Supportor, Air Guide Cover	1
4	47.692-V1.2	Engine	1
5	161.190007.00	Crankcase Cover	1
6	1.5789.1022	Flange Bolt, M10 X 22	4
7	161.191100.00	Rotor Component, Ø175 X Ø225 X 110	1
8	161.191002.00	Stator Cover	1
9	161.191200.00	Stator Assembly, Ø230 X 120	1
10	161.190002.00	End Housing	1
11	2.08.110	Bolt, M8 X 170	4
12	1.93.08	Lock Washer, Ø8	7
13	1.848.08	Washer, Ø8	6
14	161.190300.00	Carbon Brush Assembly	1
15	122.190004.01	Pinch, Carbon Brush	1
16	1.93.05	Lock Washer, Ø5	1
17	1.5783.0520	Bolt, M5 X 20	1
18	161.190001.00	Rotor Fan, 8KW	1
19	1.5789.0629	Flange Bolt, M6 X 29	4
20	2.08.113	Flange Bolt, M10 X 340	1
21	1.7244.10	Lock Washer, Ø10	3
22	2.03.050	Washer, Ø25 X Ø10.2 X 2.7	1
23	161.190019.00	Flange Plate, Fan	1

#	Part Number	Description	Qty
24	161.080009.01.2	Air Guide, Muffler Pipe, Front	1
25	161.080009.00.2	Air Guide, Muffler Pipe, Back	1
26	1.93.06	Lock Washer, Ø6	5
27	2.03.004	Washer, Ø24 X Ø6.5 X 1.5	5
28	1.5789.0615	Flange bolt, M6 X 15	5
29	161.101002.00	Gasket, Muffler	1
30	1.16674.0825	Flange Bolt, M8 X 25	1
31	161.101000.00	Muffler Assembly	1
32	1.6177.1.06	Flange Lock Nut M6	1
33	45.090006.20	Holder, Air Cleaner	1
34	1.6177.1.10	Flange Lock Nut, M10	4
35	161.201600.01	Supportor, End Housing	1
36	161.200605.00	Motor Mount	4
37	1.6177.1.08	Flange Lock Nut, M8	8
38	161.201600.00	Supportor, Engine	1
39	2.06.015	Clamp, Ø16-Ø25	1
40	161.130021.00	Pipe, LPG/NG	1
41	1.6175.08	Nut, M8	2
42	46.100001.07	Gasket, Exhaust Pipe	1
43	161.101001.00	Exhaust Pipe	1
44	1.96.08	Washer, Ø8	1
45	1.6187.1.10	Lock Nut M10, Flange, Metal	4
46	1.5789.0608	Flange bolt, M6 X 8	6

MAINTENANCE

/// CONTROL PANEL

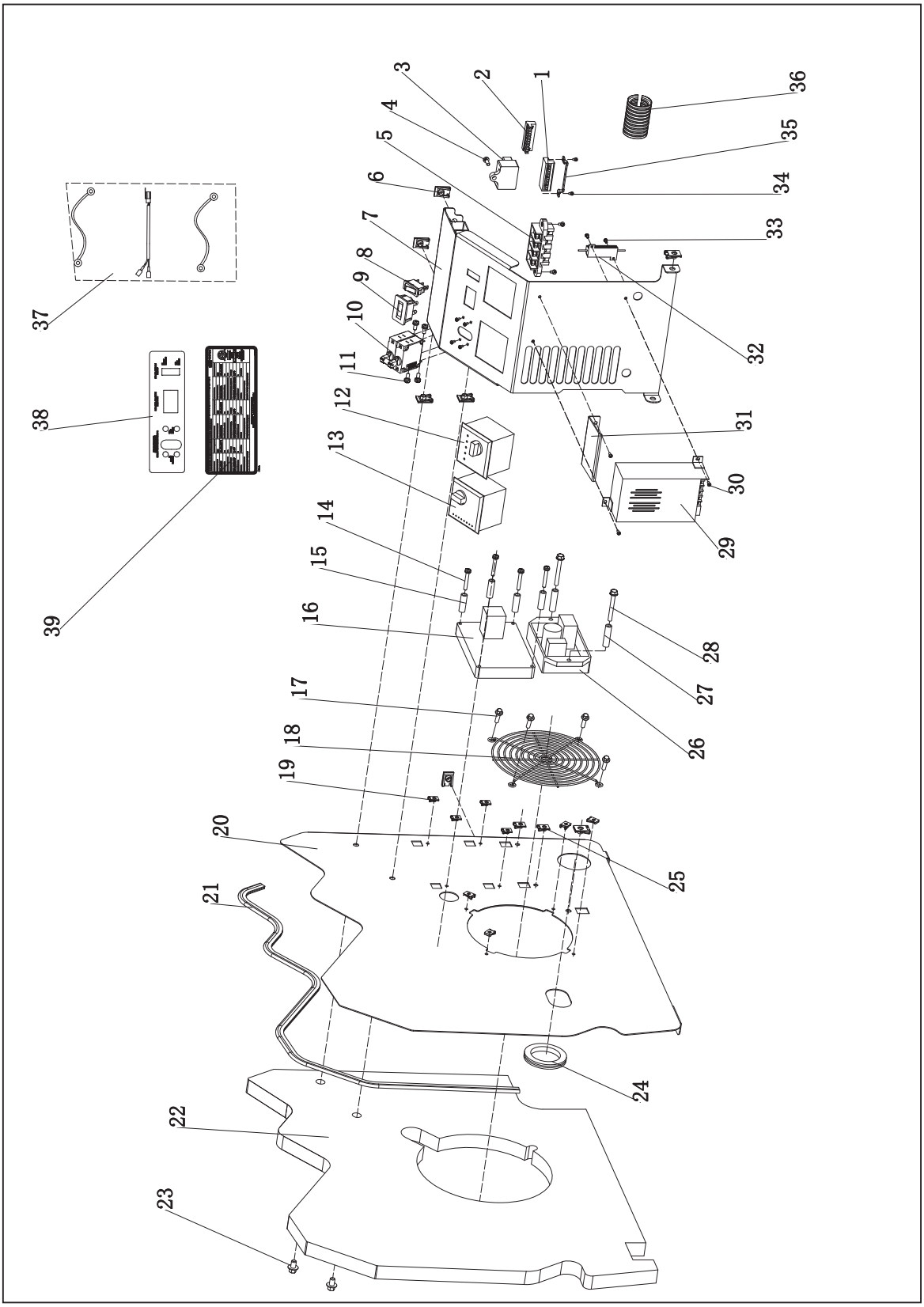

MAINTENANCE

#	Part Number	Description	Qty
1	5.1600.010	Connector, Ten Holes, Male	1
2	5.1610.010	Connector, Ten Holes, Female	1
3	5.1810.007	Over Voltage Protector	1
4	1.818.0514	Screw, M5 x 14	3
5	161.210011.02	Terminal Block, 60A, 90° Angle	1
6	2.02.032	Cage Nut, M8	7
7	161.200004.60.24	Cover, Electric Cabinet, Silk Grey, Flame Retardant and textured	1
8	5.1000.006.3	Switch, UL, Red	1
9	5.1420.002	Hour Meter	1
10	5.1240.935	35.5Amp Circuit Breaker, Double Pole, UL	1
11	1.9074.3.0510	Screw, M5X10	4
12	5.1850.004	ATS Controller, ATS100	1
13	5.1850.003	Generator Controller, GTR128	1
14	1.5789.0550	Flange Bolt, M5 x 50	4
15	2.13.028	Bushing, Ø5.5 x Ø14 x 25	4
16	5.1850.005	Relay Module, Engine	1
17	2.08.068	Flange Bolt, M5 x 13	4
18	161.200020.00	Grille	1
19	2.02.030	Cage Nut M5	8
20	161.200005.60.24	Firewall, Right, Silk Grey, Flame Retardant and textured	1

#	Part Number	Description	Qty
21	161.200109.61	Rubber Strip, 1120mm, Flame Retardant	1
22	161.200021.04.6	Foams, Right Firewall, Flame Retardant	1
23	1.16674.0812	Flange Bolt, M8×12	3
24	163.210003.00	Grommet, Wire	1
25	2.02.031	Cage Nut, M6	2
26	161.190200.00	AVR, TT91-15U	1
27	2.13.029	Bushing, Ø7 × Ø14 × 50	2
28	1.5789.0675	Flange Bolt, M6 x 75	2
29	5.1820.003	Charger, Battery, 24V	1
30	1.9074.4.0414.2	Screw, M4 x 14	3
31	163.200004.61.24	Cover, Charger, Silk Grey, Flame Retardant and textured	1
32	5.1860.004	Electrical Resistance, GH-RX24-50W	1
33	1.9074.4.0306	Screw, M3 x 6	6
34	1.823.0412	Screw, M4 x 12	2
35	161.210017.00	Supportor, Ten Holes, Connector	1
36	5.1320.017	Plastic Conduit, CSA, 50mm	1
37	100199.21.10.V1.2	Wire Assembly	1
38	161.230003.00.V1.0	Decal, Panel,100199	1
39	161.230004.00.V1.0	Decal, Nameplate, 100199	1

MAINTENANCE

/// WIRING DIAGRAM

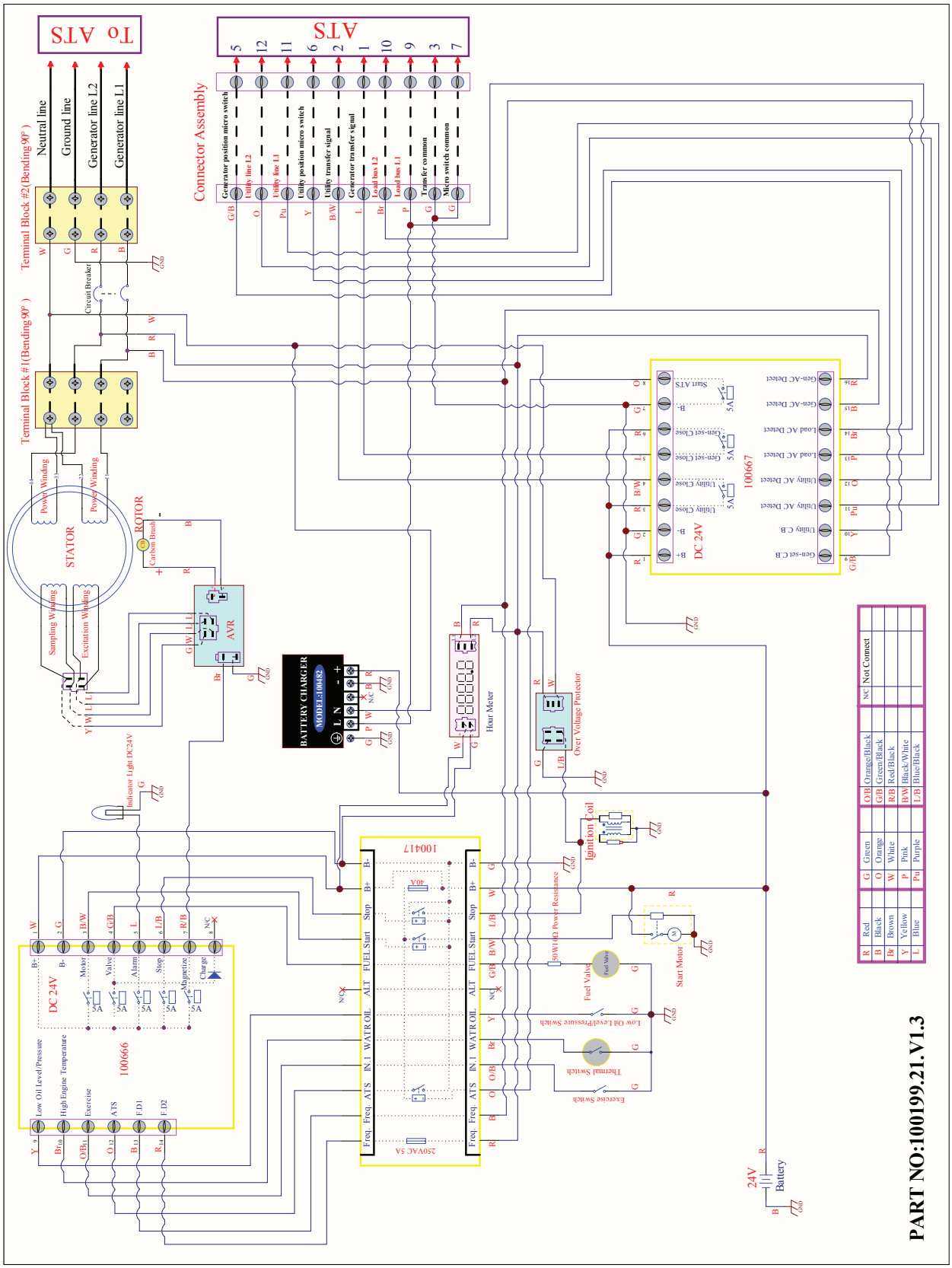

TROUBLESHOOTING HSB

The number one problem which relates to starting, output and performance is “Fuel Pressure Insufficient”. Utility fuel regulator and pipe sized to small which can be compounded by pipe run distance to long for the size of pipe installed. Confirm fuel pressure to the fuel regulator during No-load and Load operation.

ENGINE WILL NOT CRANK/TURN OVER

1.	HSB set in “OFF” mode.	Place the HSB controllers in the proper AUTO and ATS start positions.
2.	Battery not connected or loose, corroded posts or wires	Connect the batteries according to owner’s manual, clean and tighten the battery connections
3.	Battery(s) not charged or low charge.	Recharge or replace battery(s).
4.	Check for active fault code.	Identify fault code, correct and reset.
5.	Defective starter solenoid *	
6.	Defective starter *	

GENERATOR WILL CRANK/TURN OVER BUT WILL NOT START

1.	Check for active fault code.	Identify fault code, correct and reset.
2.	Fuel valve(s) turned off.	Turn on fuel supply.
3.	Fuel pressure insufficient*.	Manometer check, confirm fuel pressure to fuel regulator*.
4.	Weak battery(s).	Recharge or replace battery(s)
5.	Low oil level.	Check for oil leaks. Check the oil level and add oil if necessary.
6.	Spark plug wire is disconnected.	Connect spark plug wire.
7.	Defective fuel solenoid/regulator. *	

ENGINE STARTS, RUNS ROUGH

1.	Fuel pressure insufficient*.	Manometer check, confirm fuel pressure to fuel regulator*.
2.	Wrong fuel jets.	Check jets for NG or LPG, change to correct Master Mixer fuel jets.
3.	Faulty spark plug, loose spark plug wire.	Change spark plug, set gap, connect wire.
4.	Plugged air cleaner	Clean or replace air cleaner.
5.	Generator overloaded*.	Remove one or more loads*.
6.	Shorted circuit *	

HSB STARTS, THEN SUDDENLY STOPS

1.	Check for active fault code.	Identify fault code, correct and reset.
2.	Fuel supply insufficient*	Manometer check, confirm fuel pressure to fuel regulator*.
3.	Low oil, pressure shut down	Check for oil leaks. Check the oil level and add oil if necessary.
4.	Generator over loaded	Turn off standby circuits for house, reset fault, place unit back into AUTO and ATS mode. Turn on standby circuits for house. If problem returns contact Champion or Champion service dealer*.
5.	Engine high/over temperature shut down	Check all intake and exhaust ventilation around the HSB, remove all debris. Let HSB sit for 30 minutes to cool down.

TROUBLESHOOTING

NO AC OUTPUT

1.	HSB set in “TEST” mode	Place HSB in AUTO and ATS mode.
2.	Circuit breaker in “OFF” position	Turn on breaker.
3.	ATS control in “OFF” mode	Place ATS module in ATS mode.
4.	Main circuit breaker in “OFF” position.	Turn on breaker.
5.	Transfer switch breaker in “OFF” position.	Turn on breaker.
6.	Standby breakers set in “OFF” position.	Turn on breaker.
7.	Line circuit tripping breaker because of short circuit *	
8.	Line circuit tripping breaker because of overload *	
9.	Poor wiring connections*	
10.	ATS problems*	

LED INDICATORS

In all cases when the LED is GREEN, this is an indicator that the HSB is performing properly.

In all cases when the LED is RED, this is an indicator that the HSB has registered a fault and must be corrected. Only the “LOW BATTERY LED” will not latch out or shut down the HSB. All other RED LED faults will latch out, shut down, disable starting and light the RED LEDS on the Engine Control Module and the exterior fault code light on the backside of the HSB.

RESET FAULT CODE(S)

There is an exterior fault code indicator light located on the back of the enclosure. This should be checked weekly to make sure there are no active fault codes.

The fault code(s) can be reset by placing the Engine Control Module in the OFF position for 10 seconds and then placed into ATS mode. This will reset fault LED, however if a fault code(s) re-occurs it must be addressed.

BATTERY(S) NO OR LOW LEVEL CHARGED, BATTERY(S) DEAD, NEEDS REPLACEMENT, THE EXERCISE TIME MUST BE RESET ONCE THE BATTERY(S) HAVE BEEN DISCONNECTED.

*Contact Champion Power Equipment, Technical Service toll free 1-877-338-0999,

tech@championpowerequipment.com or your nearest Champion dealer.

www.championpowerequipment.com

IDENTIFY/SELECT STANDBY CIRCUITS

Identify the basic needs

It is very important to understand what items the home owner wants powered by the HSB during a utility failure. The selection of these items will indicate which circuits will be selected for connection to the ATS so that they are powered by the HSB. Unforeseen power outages can last from minutes to days, so it is important to focus circuit selections on those that power household items that are deemed essential and within the output capability of the HSB

An authorized or certified dealer or electrician can come to your home and measure the loads with a clamp-on AMP meter which would provide accurate load demands for each circuit tested.

Once you have identified the customer needs, you can properly size the HSB by referring to the sizing guide provided by Champion, www.championpowerequipment.com or call Champion 1-877-338-0999.

Circuits must be protected by the same size breaker. For example, a 15 amp 120 volt circuit in the ATS will replace a 15 amp 120 volt circuit in the main utility distribution panel. When tied together or backed up, the breakers must be the same size.

SURGE PROTECTION

⚠ CAUTION

Voltage fluctuation may impair the proper functioning of sensitive electronic equipment.

Electronic devices, including computers and many programmable appliances use components that are designed to operate within a narrow voltage range and may be affected by momentary voltage fluctuations. While there is no way to prevent voltage fluctuations, you can take steps to protect sensitive electronic equipment.

1. Install UL1449, CSA-listed, plug-in surge suppressors on the outlets feeding your sensitive equipment. Surge suppressors come in single or multi-outlet styles. They're designed to protect against virtually all short-duration voltage fluctuations.

ADDITIONAL INFORMATION

CUSTOMER FAMILIARIZATION SUMMARY

It's important to educate the home owner on proper maintenance, operation and service call procedures. A properly educated home owner can reduce unnecessary service trips and phone calls.

Ensure that the installation of the HSB and ATS has been correctly performed as outlined by the manufacturer and that it meets all applicable codes.

Test and confirm proper operation of the HSB and ATS system as outlined in the appropriate installation and owner's manuals.

Educate the home owner on the location and operation of;

1. Full flow shutoff valve
2. Automatic operation of the HSB system
3. Engine Control Module and LED indicators
4. ATS Module and LED indicators
5. Battery Charger and LED indicators
6. Exterior fault code indicator LED on the backside of the HSB
7. ATS operation
8. Exercise scheduled time of operation
9. Scheduled Maintenance
10. Fill out and provide the customer a copy of the HSB, ATS model & serial number reference. This information is extremely important for part purchases and service information, these numbers are specific to each HSB and ATS.
11. Fill out and provide the customer a copy of the ATS back-up circuits.
12. Fill out the Circuit Label inside the ATS..

It's always a good business practice to place business cards in the Owner's and Installation manuals and place dealer stickers on the HSB and ATS for the customer's reference.

NOTICE

By law it is required in many states to have a Carbon Monoxide (CO) detector in operating condition in your home. Carbon Monoxide detector(s) must be installed and maintained indoors according to the manufacturer's instructions. A CO monitor is an electric device that detects hazardous levels of CO. When there is a buildup of CO, the monitor will alert the occupants by flashing a visual light indicator and an audible alarm. Smoke alarms cannot detect CO gas.

CO gas is odorless, colorless and tasteless and is unlikely to be noticed until a person is overcome. Standby generators emit carbon monoxide (CO) gas in the engine exhaust.

HSB, ATS MODEL & SERIAL REFERENCE ATS BACK-UP CIRCUITS

HSB Model Number _____

HSB Serial Number _____

Fuel Type LPG_____ NG_____

ATS Model Number _____

ATS Serial Number _____

ATS circuits powered _____

_____ _____

_____ _____

_____ _____

_____ _____

_____ _____

_____ _____

_____ _____

Date Installed _____

Dealer/Installer _____

Address _____

_____

Phone _____

Cell _____

Purchased from _____

ADDITIONAL INFORMATION

MAINTENANCE AND SERVICE RECORD

Keeping accurate records when any service is preformed is important. Records replace guessing when a repair was done or when it should be scheduled. Hour Meter notation as well as the date provides better time period records. To maintain the overall performance throughout the life of the product follow the scheduled maintenance chart contained in your owner's manual or refer to www.championpowerequipment.com. Genuine Champion parts must be used to ensure warranty coverage.

Date Hour Meter Service Preformed _____

Record the name, address and phone number of your authorized Champion dealer

Champion Power Equipment

12039 Smith Ave.

Santa Fe Springs, CA 90670 USA

Made in China

10 Year Limited Warranty*
Basic Warranty Provisions

Champion Air-Cooled 8.5kW – 20kW Home Standby Units
USA and Canadian Models

For a period of 10 years or 2000 hours (whichever occurs first) from successful activation by an Authorized Champion Home Standby Dealer, Champion Power Equipment will, at its option, repair or replace any part(s) which upon examination, inspection and testing by Champion Power Equipment or an Authorized Champion Home Standby Dealer is found to be defective under normal use and service, in accordance with the Warranty Schedule set forth below.

Any equipment that the purchaser/owner claims to be defective must be examined by the nearest Authorized/Certified Champion Home Standby Service Dealer. This warranty applies only to Champion Power Equipment automatic standby generators used in "Standby" applications as Champion has defined Standby. Scheduled Maintenance, as outlined by the generator owner's manual is required. This Scheduled Maintenance should be performed by an Authorized/Certified Champion Home Standby Service Dealer.

WARRANTY SCHEDULE

Years 1 and 2 – Limited comprehensive coverage on mileage, labor and parts
Years 3 through 10 – Limited comprehensive coverage on parts only

GUIDELINES:

- Warranty begins upon the successful activation of the unit.
- Unit should be Registered and Proof of Purchase and Maintenance must be available.
- Warranty is transferable between ownership of original installation site.
- Warranty only applies to permanently wired and mounted units.
- Any and all warranty repairs and/or concerns must be performed and/or addressed by an Authorized/Certified Champion Home Standby Service Dealer. Repairs or diagnostics performed by individuals other than Authorized/Certified Champion Home Standby Service Dealers not authorized in writing by Champion Power Equipment will not be covered.
- A Champion approved Transfer Switch is highly recommended to be used in conjunction with the generator set. The Champion Transfer Switch is covered under its own, separate warranty listed in the Transfer Switch Instruction Manual and is not covered under this warranty schedule.
- If a Non-Champion approved Transfer Switch is substituted for use and directly causes damage to the generator set, no warranty coverage shall apply.
- Steel enclosures are warranted against rusting for the first year of ownership only. Damage caused after receipt of generator is the responsibility of the owner and is not covered by this warranty. Nicks, scrapes, dents or scratches to the painted enclosure should be repaired promptly by the owner.
- All warranty expense allowances are subject to the conditions defined in Champion Power Equipment "Home Standby" Warranty Policy and Procedures Manual.

THIS WARRANTY SHALL NOT APPLY TO THE FOLLOWING:

Original installation or start-up costs

Champion Home Standby generators that utilize non-Champion Power Equipment replacement parts

Costs of normal maintenance (i.e. tune-ups, associated part(s), adjustments, loose/leaking clamps, installation and start-up)

Units sold, rated or used for "Prime Power", "Trailer Mounted" or "Rental Unit" applications

Damage to generator system (including transfer switch) caused by improper installation or costs necessary to correct installation

Units used for Prime Power in place of existing utility power (where utility power is present) or in place of utility power where utility power service does not normally exist. Prime power includes any application that does not use the utility grid for electric power (example: Solar power)

Fuel connections other than conventional utility company supplied natural gas systems or conventional LP vapor withdrawal systems

Any failure caused by contaminated fuels, oils or lack of proper fuels, oils or failure to perform scheduled maintenance and service the air filter

Steel enclosures that are rusting due to the improper installation, location in a harsh or saltwater environment or scratched where integrity of paint applied is compromised

Failures due, but not limited, to normal wear and tear, accident, misuse, abuse, negligence or improper installation. As with all mechanical devices, the Champion engines need periodic part(s) service and fluid replacement to perform as designed.

Failures caused by any external cause or act of God, such as collision, theft, vandalism, riot or wars, nuclear holocaust, fire, freezing, lightning, earthquake, windstorm, hail, volcanic eruption, water or flood, tornado or hurricane

Damage related to rodent and/or insect infestation

Covered warranty labor rates are based on normal working hours. Overtime, holiday, or emergency labor costs for repairs outside of normal business hours will be the responsibility of the customer

Any incidental, consequential or indirect damages caused by defects in materials or workmanship, or any delay in repair or replacement of the defective part(s)

Failure due to misapplication to provide sufficient cooling air and to regularly exercise the generator under load

Telephone, cellular phone, facsimile, internet access or other communication expenses

Living or travel expenses of person(s) performing service, except as specifically included within the terms of a specific unit warranty period

Expenses related to "customer instruction" or troubleshooting where no manufacturing defect is found

Rental equipment used while warranty repairs are being performed and/or overnight freight costs for replacement part(s)

Costs incurred for equipment used for removal and/or reinstallation of generator, (i.e.: cranes, hoists, lifts, etc.)

Planes, ferries, railroad, buses, helicopters, snowmobiles, snow-cats, off-road vehicles or any other mode of transport deemed abnormal

Starting batteries, fuses, light bulbs, engine fluids, and spark plugs

THIS WARRANTY AND THE ATTACHED U.S. EPA, CARB and/or ECCC EMISSION CONTROL SYSTEM WARRANTIES (WHEN APPLICABLE) ARE IN LIEU OF ALL OTHER WARRANTIES, EXPRESS OR IMPLIED, INCLUDING WARRANTIES OF MERCHANTABILITY OR FITNESS FOR A PARTICULAR PURPOSE.

Any implied warranties which are allowed by law, shall be limited in duration to the terms of the express warranty provided herein. Some states do not allow limitations on how long an implied warranty lasts, so the above limitation may not apply to purchaser/owner.

CHAMPION POWER EQUIPMENT'S ONLY LIABILITY SHALL BE THE REPAIR OR REPLACEMENT OF PART(S) AS STATED ABOVE. IN NO EVENT SHALL CHAMPION POWER EQUIPMENT BE LIABLE FOR ANY INCIDENTAL, OR CONSEQUENTIAL DAMAGES, EVEN IF SUCH DAMAGES ARE A DIRECT RESULT OF CHAMPION POWER EQUIPMENT'S NEGLIGENCE.

Some states do not allow the exclusion or limitation of incidental or consequential damages, so the above limitations may not apply to purchaser/owner. Purchaser/owner agrees to make no claims against Champion Power Equipment based on negligence. This warranty gives purchaser/owner specific legal rights. Purchaser/owner also may have other rights that vary from state to state.

To obtain warranty service or your nearest Champion Home Standby Dealer call Champion Power Equipment Customer Service toll free 1-877-338-0999, Monday - Friday from 8:30 AM - 5:00 PM (PST/PDT).

Contact Information

Address
Champion Power Equipment, Inc.
Customer Service
12039 Smith Avenue Santa
Fe Springs, CA 90670
www.championpowerequipment.com

Customer Service and Technical Support
Mon – Fri 8:30 AM – 5:00 PM (PST/PDT)
Toll Free: 1-877-338-0999
hsb@cpeauto.com
Fax No.: 1-562-236-9429

*Except as otherwise stipulated in any of the following enclosed Emission Control System Warranties (when applicable) for the Emission Control System: U.S. Environmental Protection Agency (EPA), California Air Resources Board (CARB) and/or Environment and Climate Change Canada (ECCC).

Champion Power Equipment, Inc. (CPE),
United States Environment Protection Agency (U.S. EPA)
Emission Control System Warranty

Your Champion Power Equipment (CPE) engine complies with U.S. EPA emission regulations.

YOUR WARRANTY RIGHTS AND OBLIGATIONS:

The US EPA AND CPE are pleased to explain the Federal Emission Control Systems Warranty on your 2018 small off-road engine (SORE) and engine powered equipment. New engines and equipment must be designed, built and equipped, at the time of sale, to meet U.S. EPA regulations for small off-road engines (SORE). CPE warrants the emission control system on your small off-road engine (SORE) and equipment for the period of time listed below, provided there has been no abuse, neglect, unapproved modification, or improper maintenance of your equipment.

Your emission control system may include parts such as the carburetor, fuel-injection system, the ignition system, catalytic converter and fuel lines. Also included may be hoses, belts, connectors and other emission related assemblies. Where a warrantable condition exits, CPE will repair your small off-road engine (SORE) at no cost to you including diagnosis, parts and labor.

MANUFACTURER'S EMISSION CONTROL SYSTEM WARRANTY COVERAGE:

This emission control system is warranted for two years, subject to provisions set forth below. If, during the warranty period, an emission related part on your engine is defective in materials or workmanship, the part will be repaired or replaced by CPE.

OWNER WARRANTY RESPONSIBILITIES:
As the small off-road engine (SORE) owner, you are responsible for the performance of the required maintenance listed in your Owner's Manual. CPE recommends that you retain all your receipts covering maintenance on your small off-road engine, but CPE cannot deny warranty solely for the lack of receipts or for your failure to ensure the performance of all scheduled maintenance.

As the small off-road engine (SORE) owner, you should however be aware that CPE may deny you warranty coverage if your small, off-road engine (SORE) or a part has failed due to abuse, neglect, improper maintenance or unapproved modifications.

You are responsible for presenting your small off-road engine (SORE) to an Authorized CPE service outlet or alternate service outlet as described in (3)(f.) below, CPE dealer or CPE, Santa Fe Springs, Ca. as soon as a problem exists. The warranty repairs should be completed in a reasonable amount of time, not to exceed 30 days.

If you have any questions regarding your warranty rights and responsibilities, you should contact:

Champion Power Equipment, Inc.
Customer Service
12039 Smith Ave.
Santa Fe Springs, CA 90670
1-877-338-0999
tech@championpowerequipment.com

EMISSION CONTROL SYSTEM WARRANTY

The following are specific provisions relative to your Emission Control System (ECS) Warranty Coverage.

1. APPLICABILITY: This warranty shall apply to 1997 and later model year small off-road engines (SORE). The ECS Warranty Period shall begin on the date the new engine or equipment is delivered to its original, end-use purchaser, and shall continue for 24 consecutive months thereafter.

2. GENERAL EMISSIONS WARRANTY COVERAGE
CPE warrants to the original, end-use purchaser of the new engine or equipment and to each subsequent purchaser that each of its small off-road engines (SORE) is:

a. Designed, built and equipped so as to conform to U.S. EPA emissions standards for spark-ignited engines at or below 19 kilowatts.

b. Free from defects in materials and workmanship that cause the failure of a warranted part to be identical in all material respects to the part as described in the engine manufacturer's application for certification for a period of two years.

3. THE WARRANTY ON EMISSION-RELATED PARTS WILL BE INTERPRETED AS FOLLOWS:

a. Any warranted part that is not scheduled for replacement as required maintenance in the Owners Manual shall be warranted for the ECS Warranty Period. If any such part fails during the ECS Warranty Period, it shall be repaired or replaced by CPE according to Subsection "d" below. Any such part repaired or replaced under the ECS Warranty shall be warranted for any remainder of the ECS Warranty Period.

b. Any warranted, emissions-related part which is scheduled only for regular inspection as specified in the Owners Manual shall be warranted for the ECS Warranty Period. A statement in such written instructions to the effect of "repair or replace as necessary", shall not reduce the ECS Warranty Period. Any such part repaired or replaced under the ECS Warranty shall be warranted for the remainder of the ECS Warranty Period.

c. Any warranted, emissions-related part which is scheduled for replacement as required maintenance in the Owner's Manual shall be warranted for the period of time prior to the first scheduled replacement point for that part. If the part fails prior to the first scheduled replacement, the part shall be repaired or replaced by CPE according to Subsection "d" below. Any such emissions-related part repaired or replaced under the ECS Warranty, shall be warranted for the remainder of the ECS Warranty Period prior to the first scheduled replacement point for such emissions-related part.

d. Repair or replacement of any warranted, emissions-related part under this ECS Warranty shall be performed at no charge to the owner at a CPE Authorized Service Outlet.

e. The owner shall not be charged for diagnostic labor which leads to the determination that a part covered by the ECS Warranty is in fact defective, provided that such diagnostic work is performed at a CPE Authorized Service Outlet.

f. CPE shall pay for covered emissions warranty repairs at non-authorized service outlets under the following circumstances:

i. The service is required in a population center with a population over 100,000 according to U.S. Census 2000 without a CPE Authorized Service Outlet AND

ii. The service is required more than 100 miles from a CPE Authorized Service Outlet. The 100 mile limitation does not apply in the following states: Alaska, Arizona, Colorado, Hawaii, Idaho, Montana, Nebraska, Nevada, New Mexico, Oregon, Texas, Utah and Wyoming.

g. CPE shall be liable for damages to other original engine components or approved modifications proximately caused by a failure under warranty of an emission-related part covered by the ECS Warranty.

h. Throughout the ECS Warranty Period, CPE shall maintain a supply of warranted emission-related parts sufficient to meet the expected demand for such emission-related parts.

i. Any CPE Authorized and approved emission-related replacement part may be used in the performance of any ECS Warranty maintenance or repair and will be provided without charge to the owner. Such use shall not reduce CPE's warranty obligation.

j. Unapproved add-on or modified parts may not be used to modify or repair a CPE engine. Such use voids this ECS Warranty and shall be sufficient grounds for disallowing an ECS Warranty claim. CPE shall not be liable hereunder for failures of any warranted parts of a CPE engine caused by the use of such an unapproved add-on or modified part.

EMISSION-RELATED PARTS INCLUDE THE FOLLOWING: (using those portions of the list applicable to the engine)

Systems covered by this warranty	Parts Description
Fuel Metering System	Fuel regulator, Carburetor and internal parts
Air Induction System	Air cleaner, Intake manifold
Ignition System	Spark plug and parts, Magneto ignition system
Exhaust System	Exhaust manifold, catalytic converter
Miscellaneous Parts	Tubing, Fittings, Seals, Gaskets, and Clamps associated with these listed systems.
Evaporative Emissions	Fuel Tank, Fuel Cap, Fuel Line (for liquid fuel and fuel vapors), Fuel Line Fittings, Clamps, Pressure Relief Valves, Control Valves, Control Solenoids, Electronic Controls, Vacuum Control Diaphragms, Control Cables, Control Linkages, Purge Valves, Gaskets, Vapor Hoses, Liquid/Vapor Separator, Carbon Canister, Canister Mounting Brackets, Carburetor Purge Port Connector

TO OBTAIN WARRANTY SERVICE:

You must take your CPE engine or the product on which it is installed, along with your warranty registration card or other proof of original purchase date, at your expense, to any Champion Power Equipment dealer who is authorized by Champion Power Equipment, Inc. to sell and service that CPE product during his normal business hours. Alternate service locations defined in Section (3)(f.) above must be approved by CPE prior to service. Claims for repair or adjustment found to be caused solely by defects in material or workmanship will not be denied because the engine was not properly maintained and used.

If you have any questions regarding your warranty rights and responsibilities, or to obtain warranty service, please write or call Customer Service at Champion Power Equipment, Inc.

Champion Power Equipment, Inc.
12039 Smith Ave.
Santa Fe Springs, CA 90670
1-877-338-0999
Attn.: Customer Service
tech@championpowerequipment.com